Part Number: 62201-8657
Status: Active
Description: Press-In Tool for Daughter Card Module

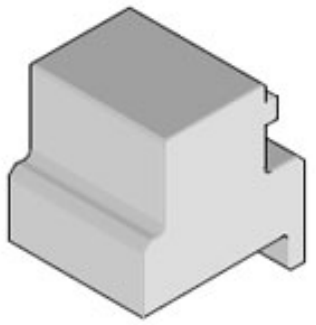

Series

image - Reference only

Documents:
RoHS Certificate of Compliance (PDF)

General

Product Family	Application Tooling
Series	T9999
Comments	See Tooling Specification (PDF) Above
Function	Insertion
Geographic Area	Global
Level of Automation	Manual
More Detailed Tech Information	applicationtooling@molex.com
Product Name	PremiumGrade™
Survey	www.molex.com//review/apptool_survey.html
Tool Type	Handtool
UPC	883906116156

Material Info

Reference - Drawing Numbers

Application Tooling Documents	ATS-622018657, TM-622018799

EU RoHS
ELV and RoHS Compliant
REACH SVHC
Not Reviewed
Low-Halogen Status
Not Reviewed

China RoHS

Need more information on product environmental compliance?

Email productcompliance@molex.com
For a multiple part number RoHS Certificate of Compliance, click here

Please visit the Contact Us section for any non-product compliance questions.

Search Parts in this Series
T9999Series

Use With
Impact™ Daughtercard Signal Module Assembly 76060