Part Number: 63802-6400

Status: Active

Description: Rear Feed Mini-Mac™ Applicator for Flag Quick Disconnect Female Terminals, 14-16 AWG Wire

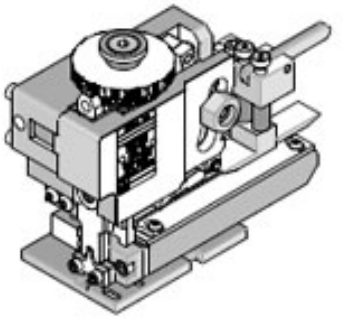

Series

image - Reference only

Documents:
RoHS Certificate of Compliance (PDF)

General

Product Family	Application Tooling
Series	T9999
Comments	See Tooling Specification (PDF) Above
Function	Crimp
Geographic Area	Global
Level of Automation	Automatic, Semi-Automatic
More Detailed Tech Information	applicationtooling@molex.com
Product Name	Mini-Mac™
Survey	www.molex.com//review/apptool_survey.html
Tool Type	Applicator
UPC	883906944308

Material Info

Reference - Drawing Numbers

Application Tooling Documents	ATS-638026400, TM-638000100, TM-638000100SP

EU RoHS **China RoHS**
Compliance Status
Not Reviewed
REACH SVHC
Not Reviewed
Low-Halogen Status
Not Reviewed

Need more information on product environmental compliance?

Email productcompliance@molex.com
For a multiple part number RoHS Certificate of Compliance, click here

Please visit the Contact Us section for any non-product compliance questions.

Search Parts in this Series
T9999Series

Use With
Flag InsulKrimp™ Quick Disconnect 19007