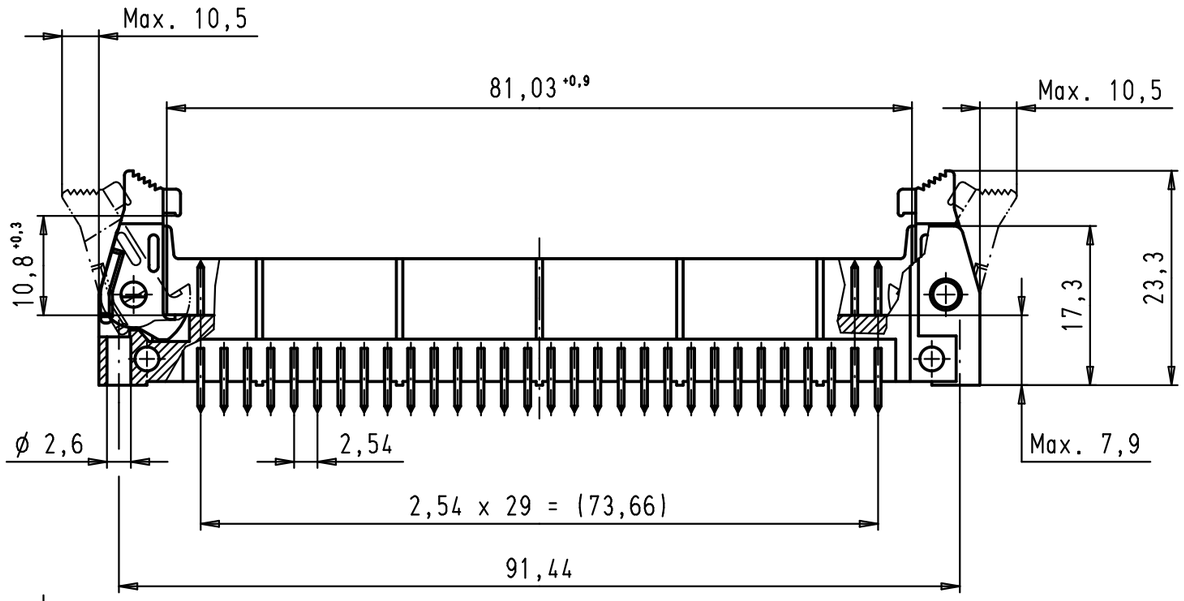

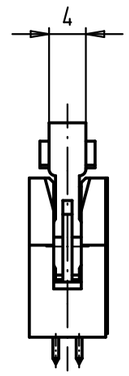

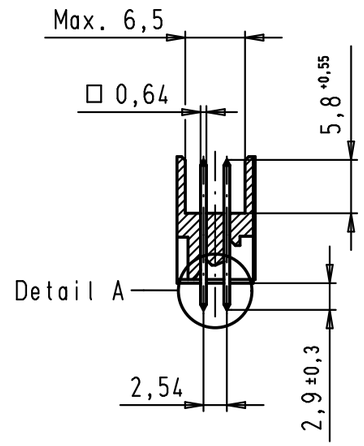

Detail A (Scale: 3:1)

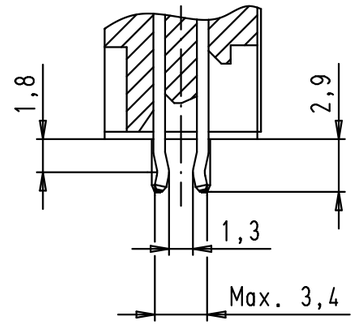

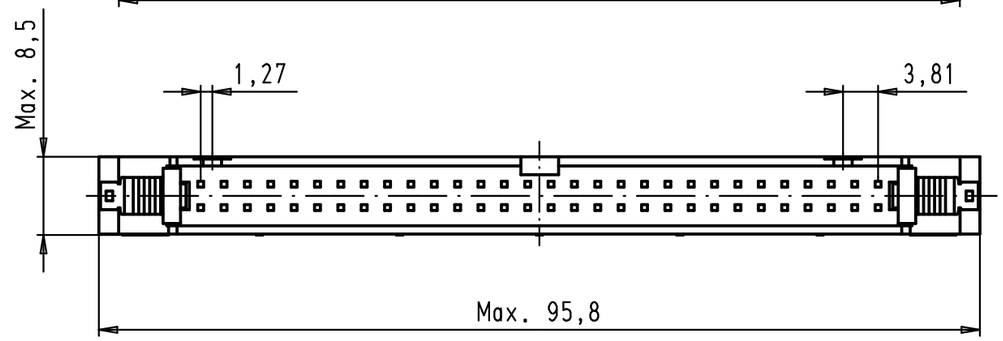

PCB layout, component side

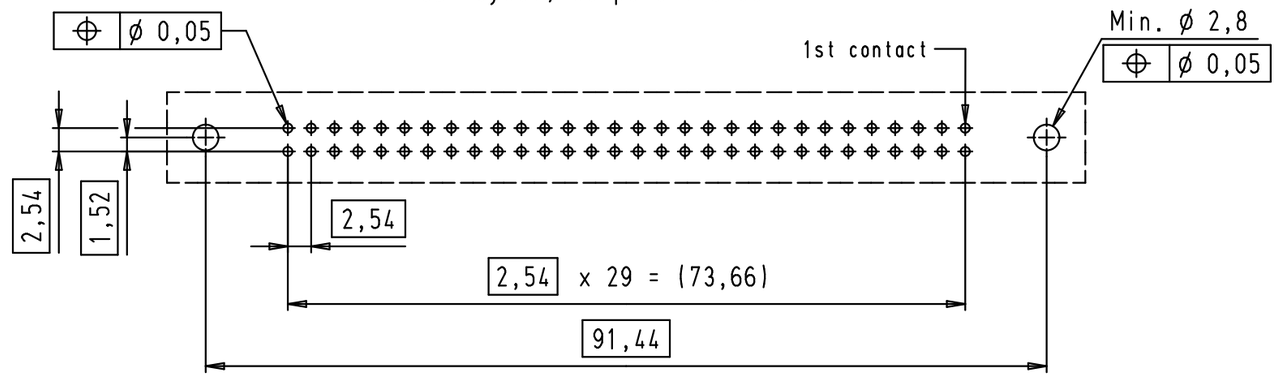

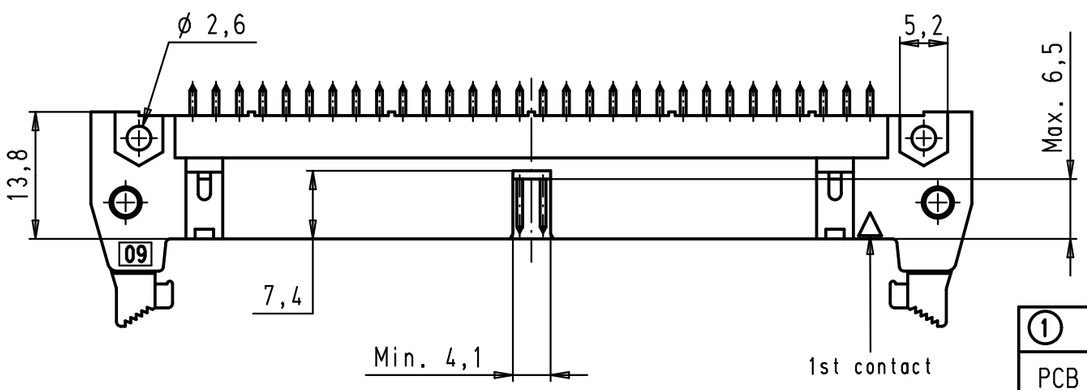

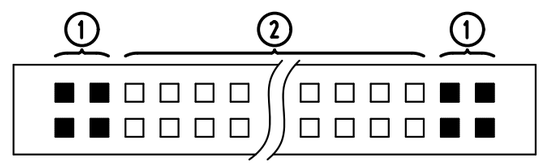

□ Straight contact
■ Kinked contact

① Kinked pins

PCB thickness from 1,50 to 1,94 mm after Cu + Sn plating
with non remelted plated through holes ø 0,85 to ø 1,05 mm
Maximum insertion force = 125 N
Minimum retention force = 3 N

② Non kinked pins

Solder pins for PCB connections
ø1±0,1 according to IEC 60 603-13

09 18 560 7014	3
09 18 560 6014	2
09 18 560 5014	0,76 µm Au
Part number	Performance level

				Dat.	Name
			Detail.	24/01/08	PK
			Insp.		
			Stand.		
34800	24/01/08	PK			
Mod.	Dat.	Name			

All Dim. in mm
Orig. Size DIN A 3

HARTING EURL
F-95972 Paris

SEK 18 Male Connector Standard
60 poles
Straight kinked pins
Short locking levers

Maßstab/Scale 1,5:1

TB 09 18 560 X01X

Sub.

Blatt/Page 1/2

Alle Rechte vorbehalten/ All rights reserved