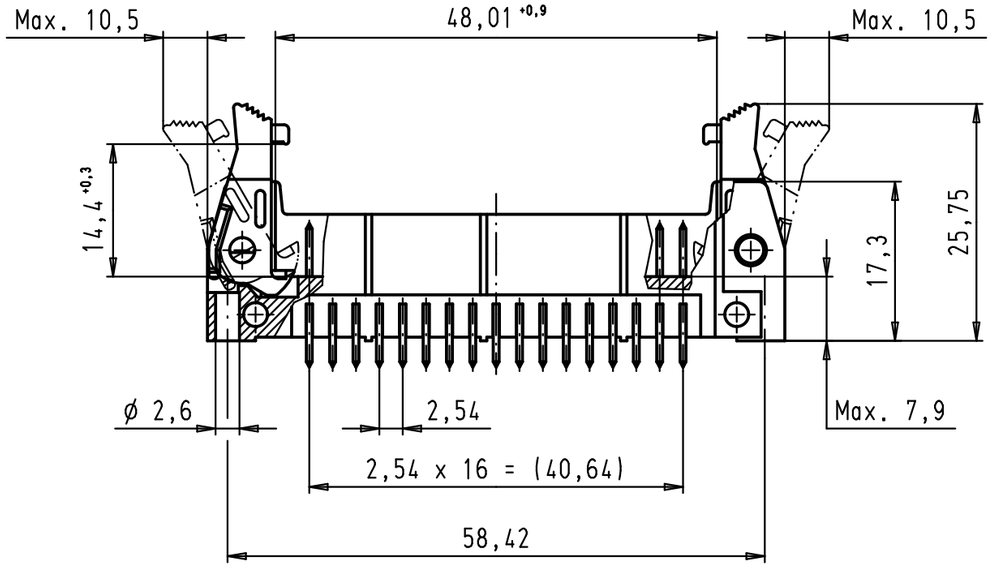

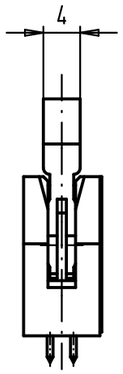

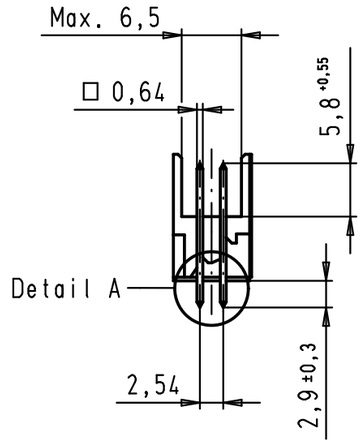

Detail A (Scale: 3:1)

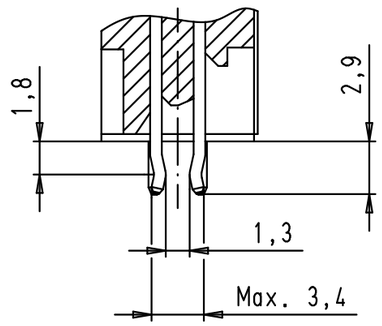

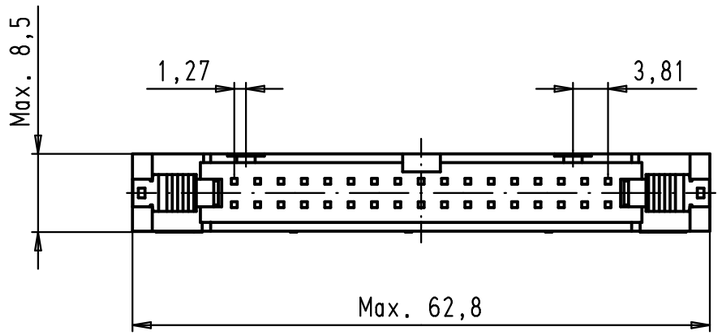

PCB layout, component side

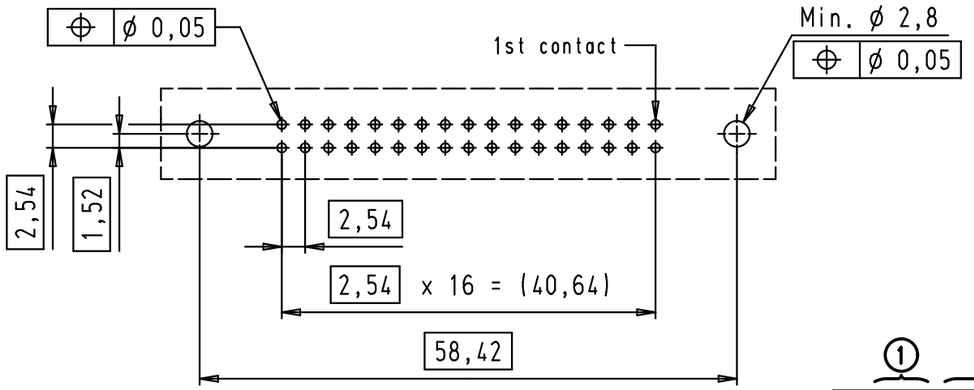

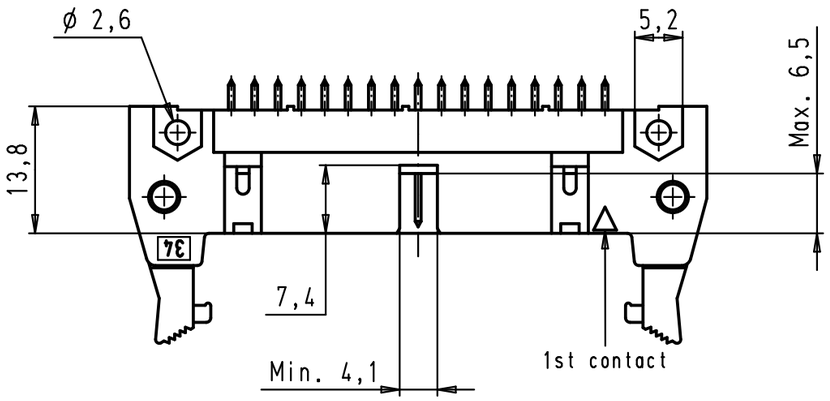

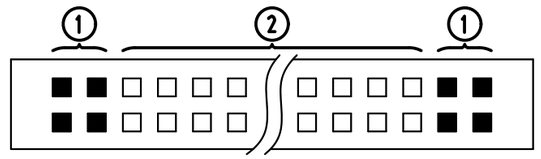

□ Straight contact
■ Kinked contact

① Kinked pins

PCB thickness from 1,50 to 1,94 mm after Cu + Sn plating
with non remelted plated through holes ø 0,85 to ø 1,05 mm
Maximum insertion force = 125 N
Minimum retention force = 3 N

② Non kinked pins

Solder pins for PCB connections
ø1±0,1 according to IEC 60 603-13

Part number	Performance level
09 19 534 7004	3
09 19 534 6004	2
09 19 534 5004	0,76 µm Au

Mod.	Dat.	Name
34800	25/01/08	LP

	Dat.	Name
Detail.	25/01/08	LP
Insp.		
Stand.		

All Dim. in mm
Orig. Size DIN A 3

HARTING EURL
F-95972 Paris

SEK 19 Male Connector Standard
34 poles
High temperature, straight kinked pins and long locking levers

Maßstab/ Scale: 1,5:1

TB 09 19 534 X00X

Sub.

Blatt/ Page 1/2

Alle Rechte vorbehalten/ All rights reserved