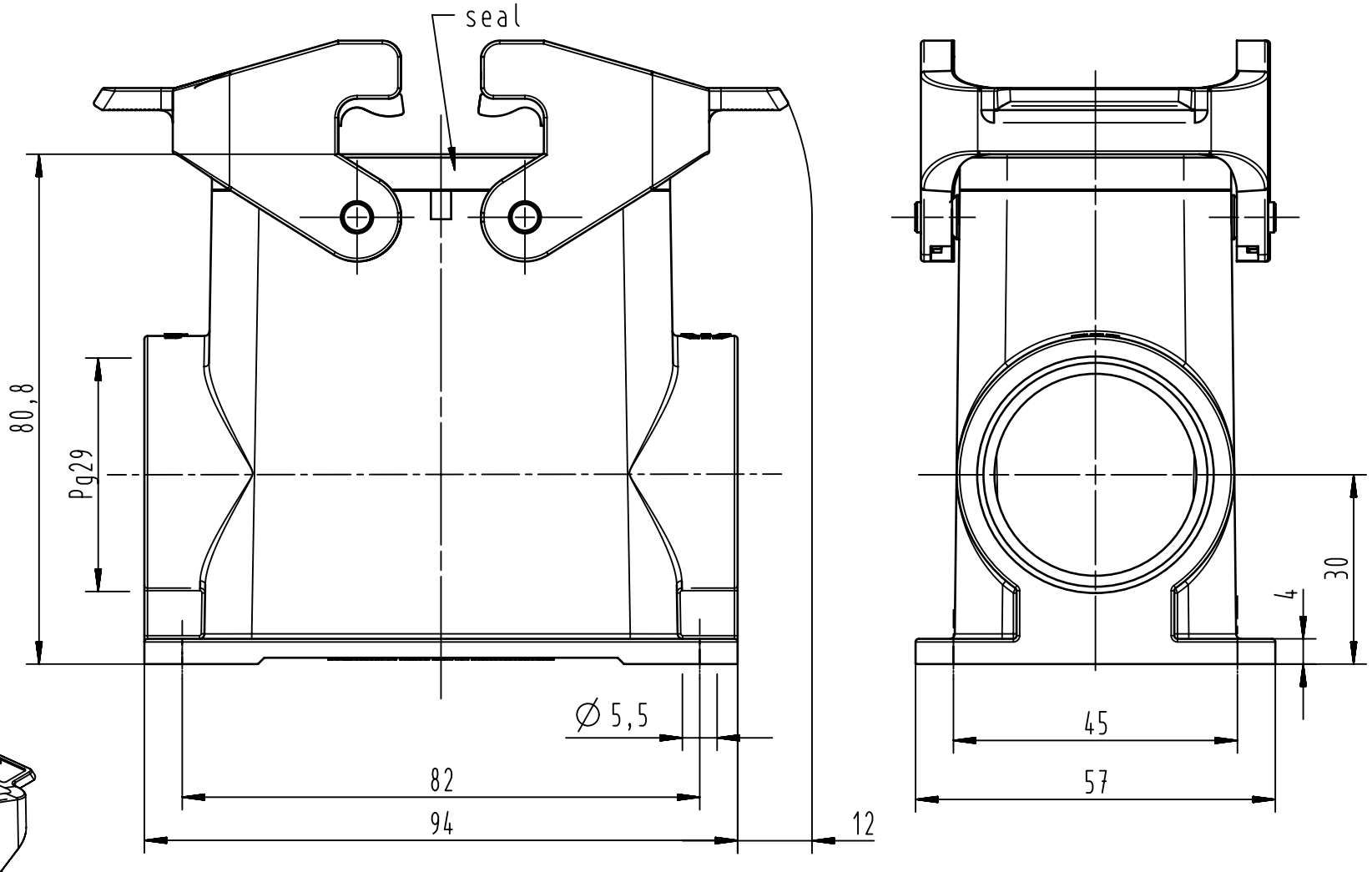

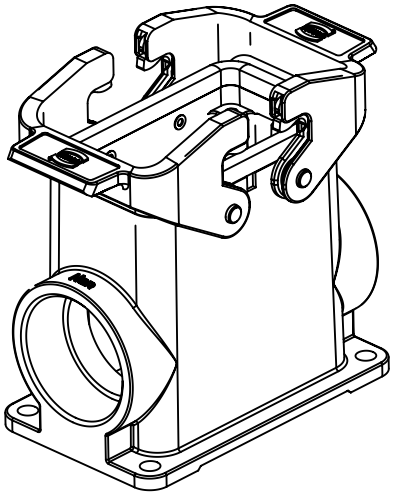

Coating	A= mm²	V= mm³	m= g	Mat.	
All Dimensions in mm Original Size DIN A4	Scale 1:1	Free size tol.		Ref. Sub.	
All rights reserved Department EL PD - DE	Created by MOELLERLI	Inspected by SCHNIEDER	Standardisation SCHMIDTM	Date 2012-08-07	State Final Release
HARTING Electric GmbH & Co. KG D-32339 Espelkamp	Title Han 10B-asg1-QB-29				Doc-Key / ECM-Nr. 100208947/UGD/004/A
	Type TB	Number 09 30 010 0233		Rev. A	Page 1/1

A4