Alle Rechte vorbehalten/ *All rights reserved*

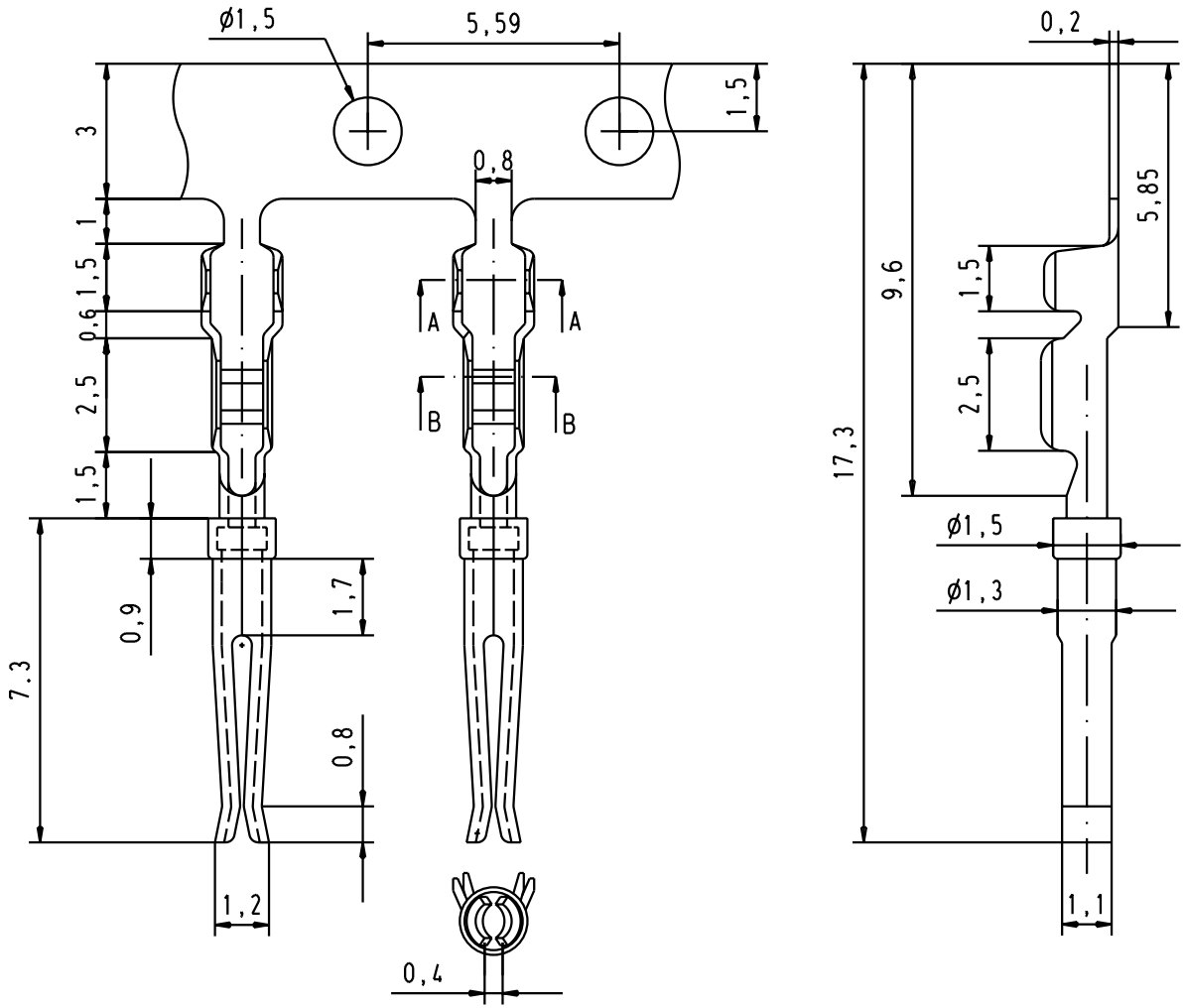


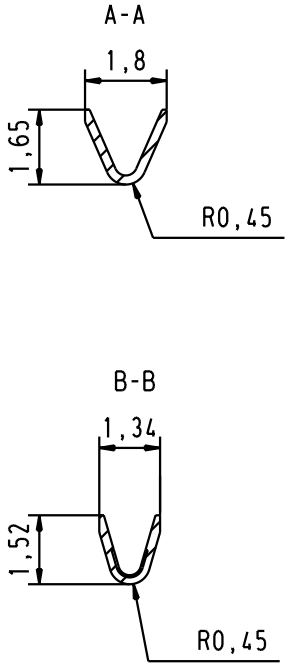


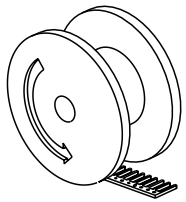

| | |
|---|---|
| 09560008265 | 0.76 µm Au |
| 09560008267 | 3 |
| Part number | Performance level |

| | | |
|---|---|---|
| 31376 | 20-JAN-03 | S.H. |
| Mod. | Dat. | Name |

| | Dat. | Name |
|---|---|---|
| Detail. | 31376 | 20-JAN-03 |
| Insp. | | |
| Stand. | | |

All Dim. in mm
Orig. Size DIN A 4

HARTING EURL
F-95972 Paris

D-Sub, high density,
stamped female contact
for AWG 24-26
500 pcs reel, unrolling left

Maßstab/ *Scale* 6 : 1

TB 0956000826x

Sub.

Blatt/ *Page* 1 /