Alle Rechte vorbehalten/ *All rights reserved*

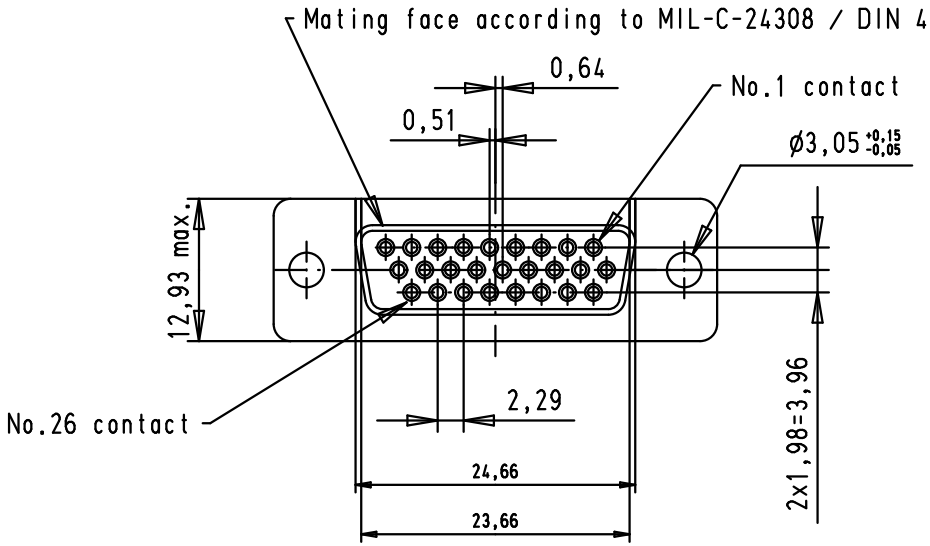


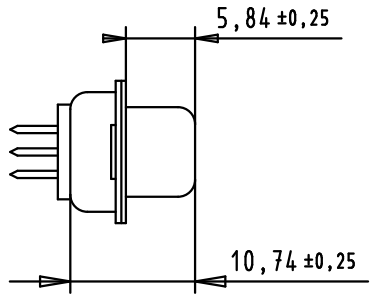


Printed layout, component side

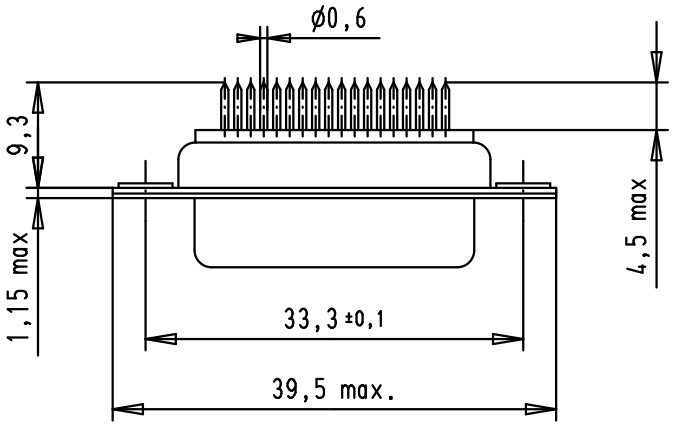


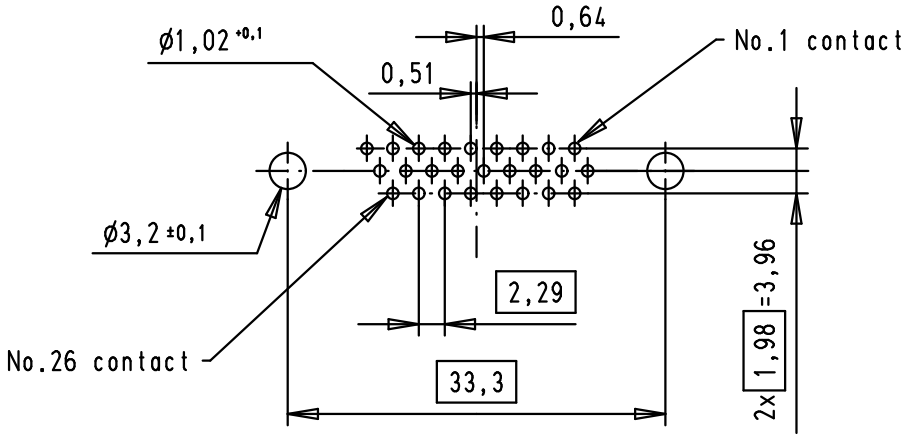


| | | | | | | | Dat. | Name | | Dsub, 26 poles, female, straight solder pins, through holes | Maßstab/ *Scale* |
|---|---|---|---|---|---|---|---|---|---|---|---|
| | | | | | | Detail. | 16-SEP-02 | CV | All Dim. in mm Orig. Size DIN A 4 | | 1.5:1 |
| | | | | | | Insp. | | | | | |
| | | | 36183 | 13-OCT-10 | BH | Stand. | | | | | |
| 09562515500 | 0.76 µm Au | | 31352 | 16-OCT-02 | *S.H.* | HARTING EURL F-95972 Paris | | | | TB 0956251x500 | Blatt/*Page* 1 |
| 09562517500 | 3 | | 31064 | 16-SEP-02 | CV | | | | | | |
| Part number | Performance level | | Mod. | Dat. | Name | | | | | Sub. | |