Alle Rechte vorbehalten/ *All rights reserved*

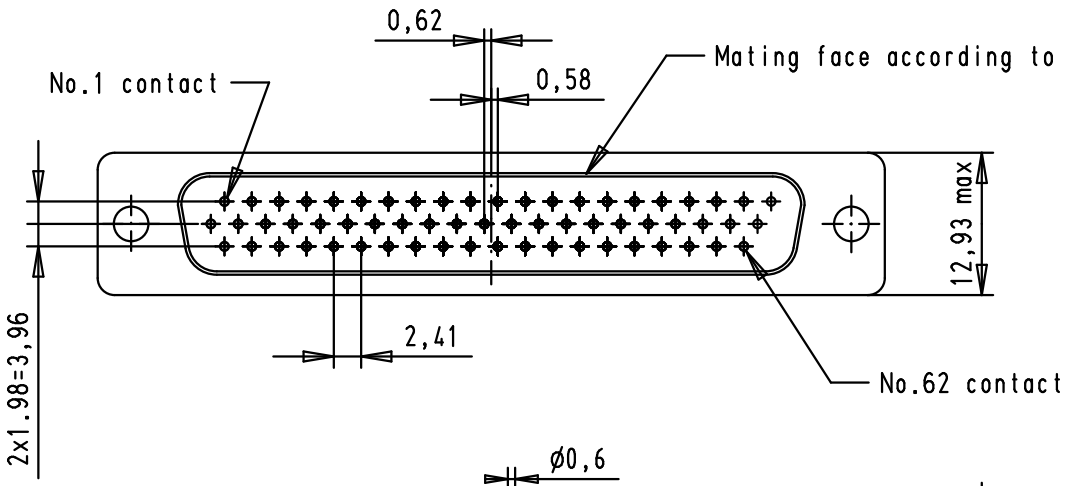

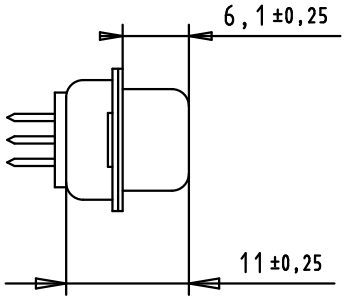

Printed layout component side

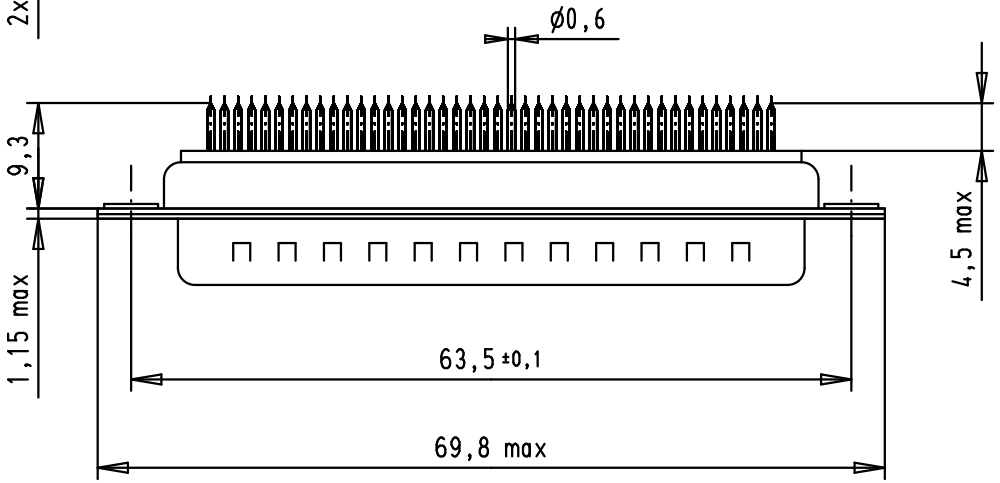

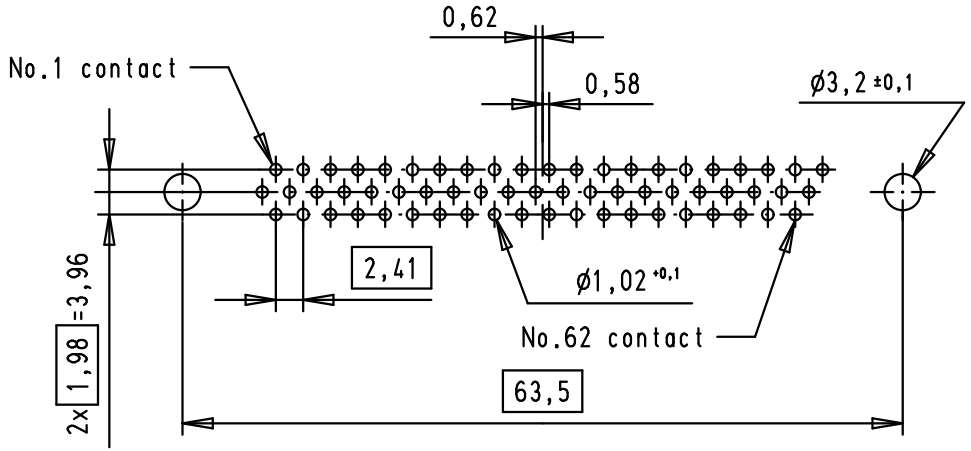

							Dat.	Name			
						Detail.	16-SEP-02	CV	All Dim. in mm Orig. Size DIN A 4	Dsub, 62 poles, male, straight solder pins, through holes, shell with dimples	Maßstab/ *Scale* 1.5:1
			36182	13-OCT-10	BH	Insp.					
			31479	31-MAR-03	*S.H.*	Stand.					
09564615700	0.76 µm Au		31352	16-OCT-02	*S.H.*	HARTING EURL F-95972 Paris				TB 0956461x700	Blatt/ *Page* 1
09564617700	3		31064	16-SEP-02	CV						
Part number	Performance level		Mod.	Dat.	Name					Sub.	