Alle Rechte vorbehalten/ *All rights reserved*

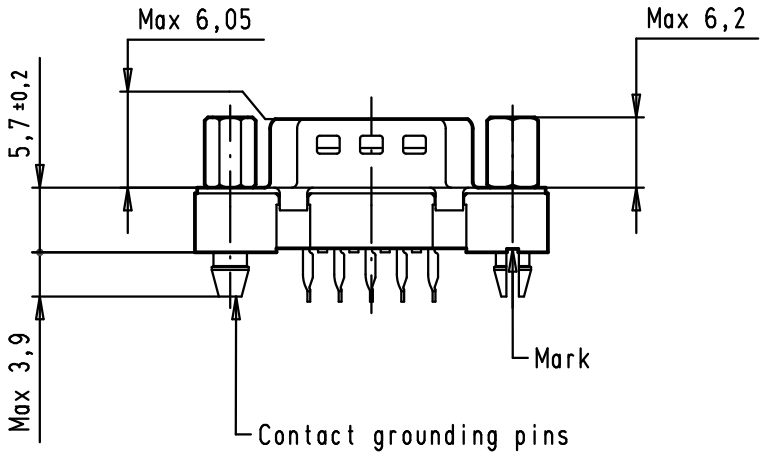


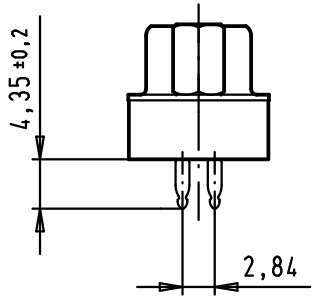


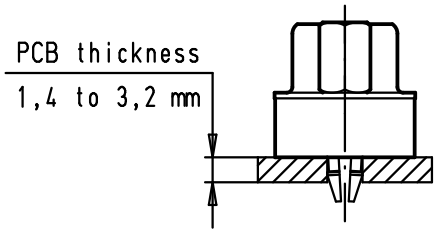


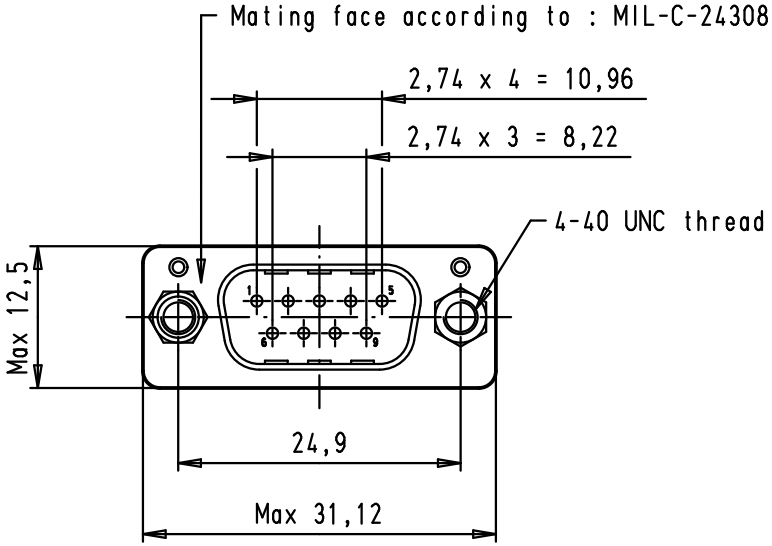


PCB layout, component side
(PCB holes plating: tin)

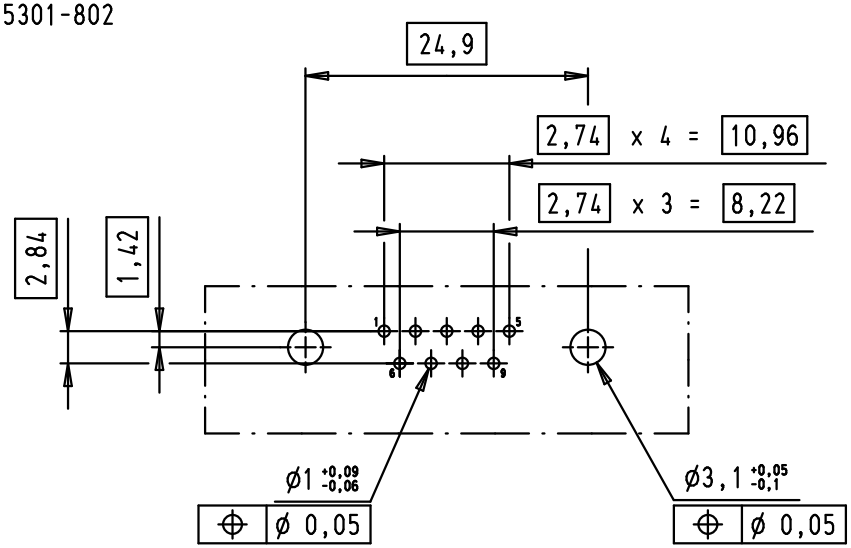


| | |
|---|---|
| 09 66 164 7717 | 3 |
| 09 66 164 6717 | 2 |
| 09 66 164 5717 | 0,76 µm Au |
| Part number | Performance level |

| Mod. | Dat. | Name |
|---|---|---|
| EC01000 | 27/11/09 | PK |
| 29735 | 06/11/01 | CV |
| 27980 | 05/03/01 | JFB |

| | Dat. | Name |
|---|---|---|
| Detail. | 05/03/01 | JFB |
| Insp. | | |
| Stand. | | |

All Dim. in mm
Orig. Size DIN A4

HARTING EURL
F-95972 Paris

D-Sub, male, straight, 9 poles, with press-in termination, version contact grounding pins and screw locks

Maßstab/ *Scale* 1,5:1

TB 09 66 164 X71X

Sub.

Blatt/ *Page* 2/2