Alle Rechte vorbehalten/ *All rights reserved*

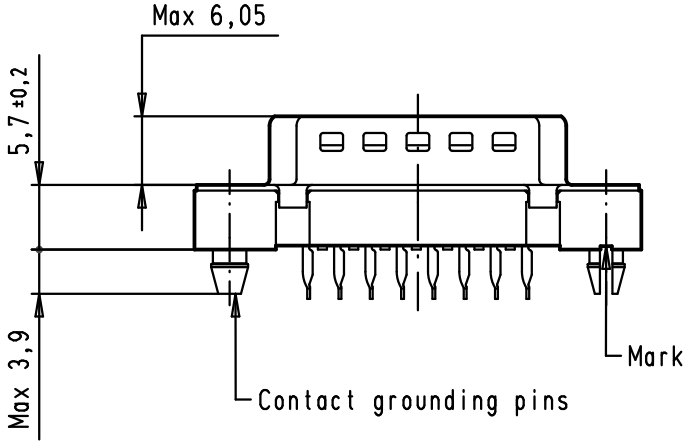

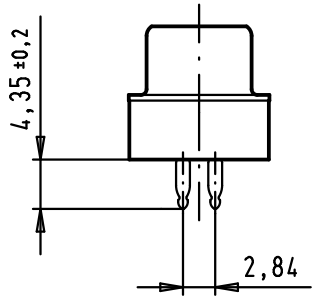

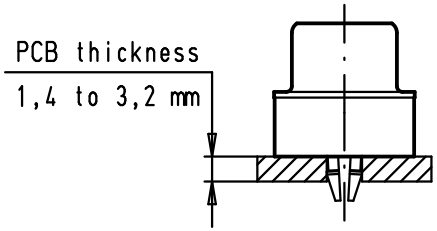

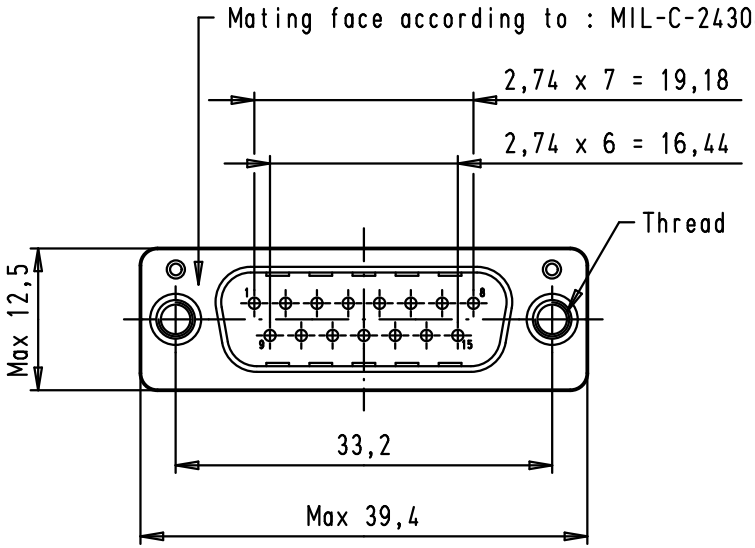

PCB layout, component side
(PCB holes plating: tin)

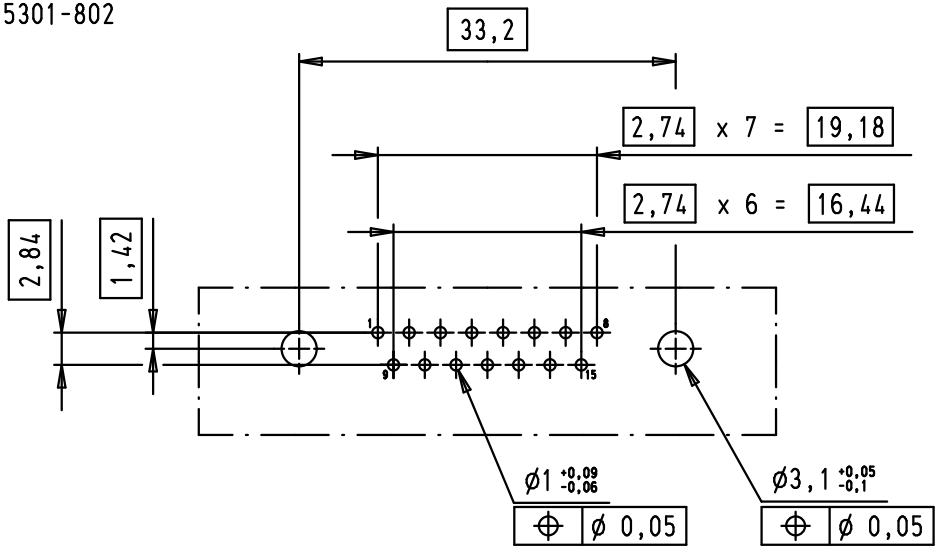

Part number	Performance level	Thread
09 66 264 7716	3	4-40 UNC
09 66 264 6716	2	4-40 UNC
09 66 264 5716	0,76 µm Au	4-40 UNC
09 66 264 7715	3	M3
09 66 264 6715	2	M3
09 66 264 5715	0,76 µm Au	M3

Mod.	Dat.	Name
EC01000	27/11/09	PK
31079	29/08/02	CV
27980	05/03/01	JFB

	Dat.	Name
Detail.	05/03/01	JFB
Insp.		
Stand.		

All Dim. in mm
Orig. Size DIN A4

D-Sub, male, straight, 15 poles, with press-in termination, version contact grounding pins

Maßstab/ *Scale* 1,5:1

HARTING EURL
F-95972 Paris

TB 09 66 264 X71X

Sub.

Blatt/ *Page* 1/2