Alle Rechte vorbehalten/ *All rights reserved*

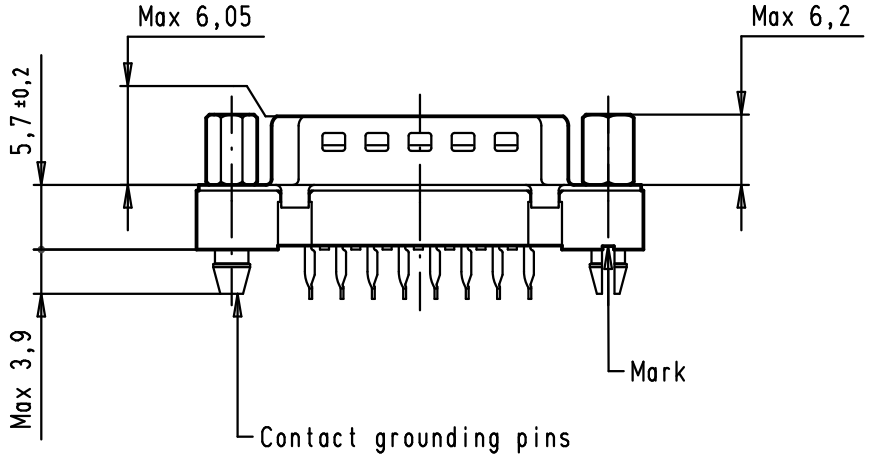

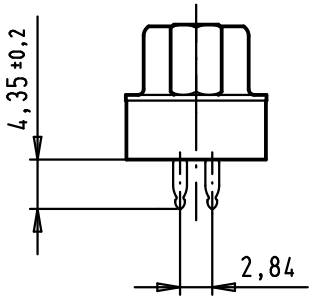

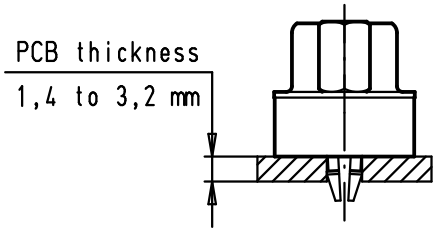

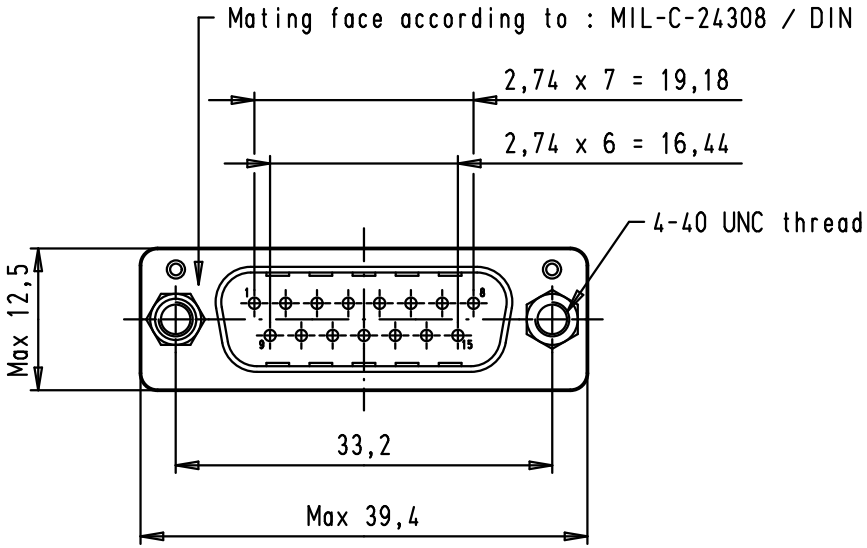

PCB layout, component side
(PCB holes plating: tin)

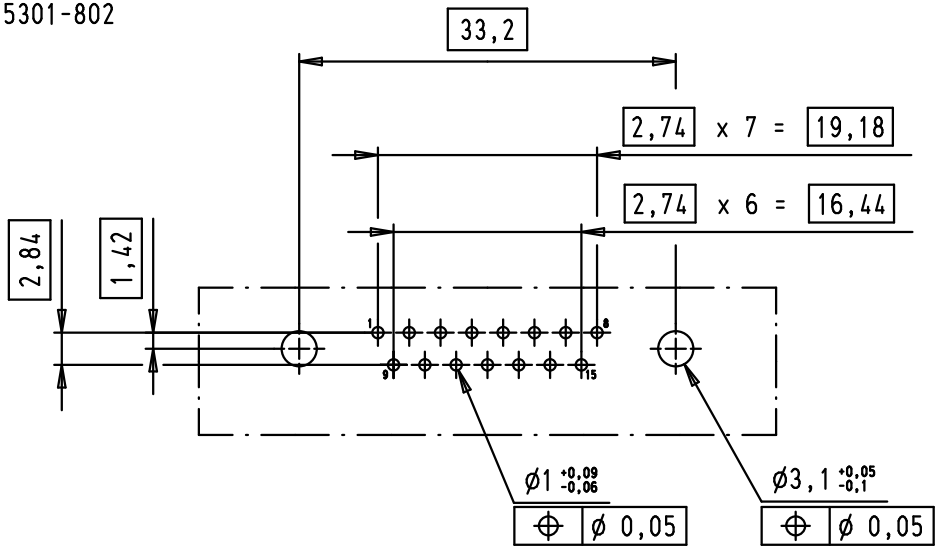

09 66 264 7717	3
09 66 264 6717	2
09 66 264 5717	0,76 µm Au
Part number	Performance level

Mod.	Dat.	Name
EC01000	27/11/09	PK
31079	29/08/02	CV
26574	14/02/00	JFB

	Dat.	Name
Detail.	14/02/00	JFB
Insp.		
Stand.		

All Dim. in mm
Orig. Size DIN A4

D-Sub, male, straight, 15 poles, with press-in termination, version contact grounding pins and screw locks

Maßstab/ *Scale* 1,5:1

HARTING EURL
F-95972 Paris

TB 09 66 264 X71X

Sub.

Blatt/ *Page* 2/2