Alle Rechte vorbehalten/ *All rights reserved*

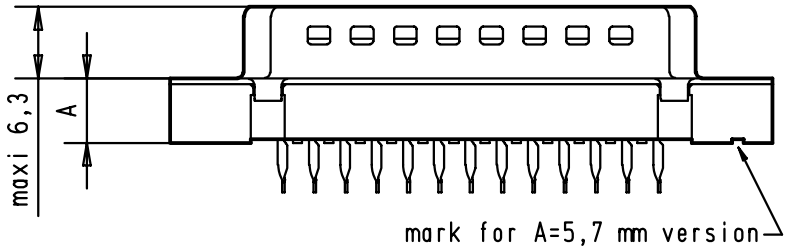

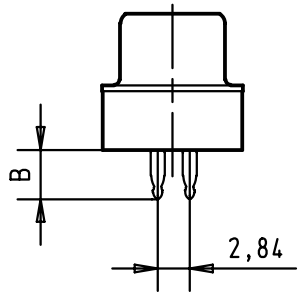

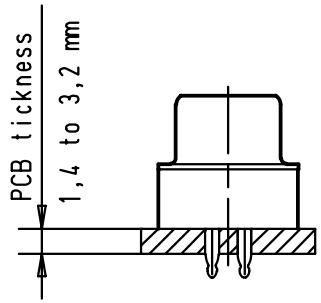

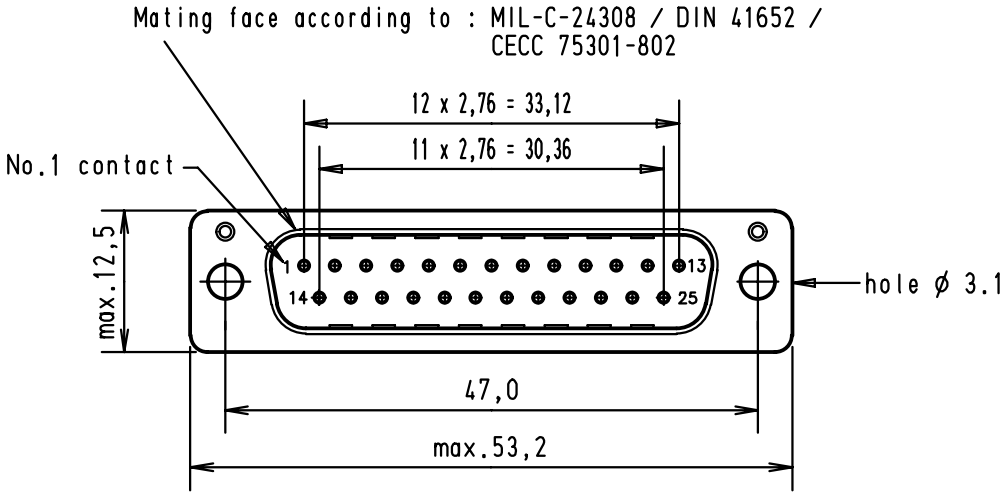

PCB layout hole
component side
(PCB holes plating : Tin)

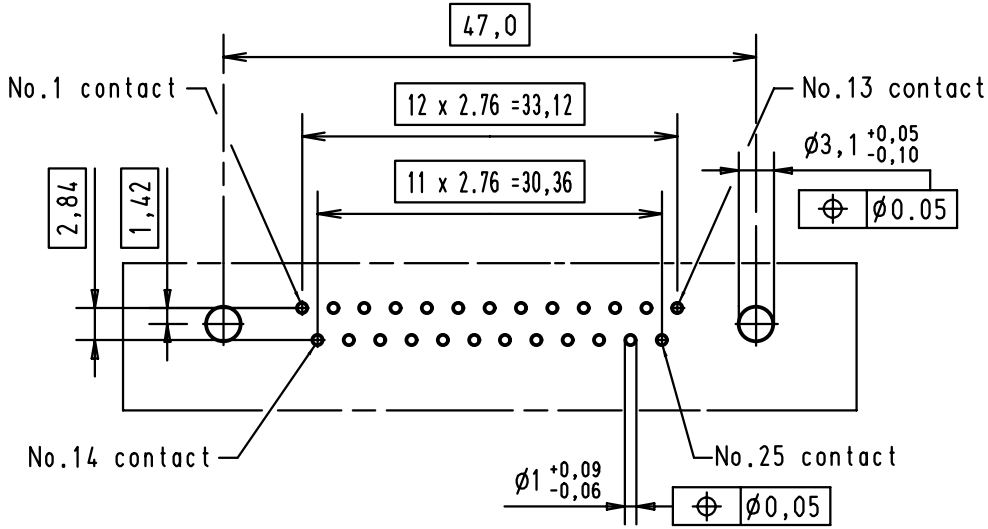

09663247704	3	5.7	4.35				
09663246704	2	5.7	4.35				
09663245704	0.76 µm Au	5.7	4.35		27980	05/03/01	jfb
Part number	Performance level	A ±0.2	B ±0.2		Mod.	Dat.	Name

	Dat.	Name
Detail.	05/03/01	jfb
Insp.		
Stand.		

All Dim. in mm
Orig. Size DIN A 3

D-Sub 25 poles straight male connector with press-in termination,version ø 3.1 hole.

Maßstab/ *Scale* 2,5:1

HARTING EURL
F-95972 Paris

TB 0966324x70x

Sub.

Blatt/ *Page* 1