Alle Rechte vorbehalten/ *All rights reserved*

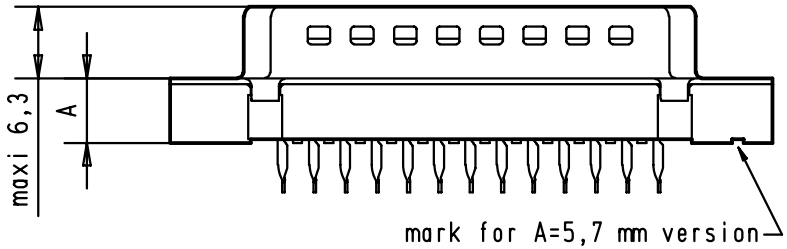


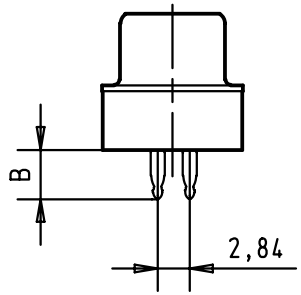


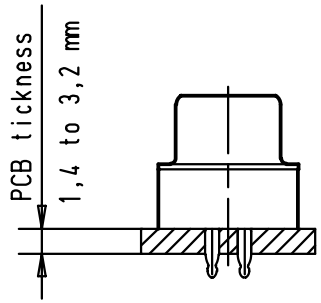


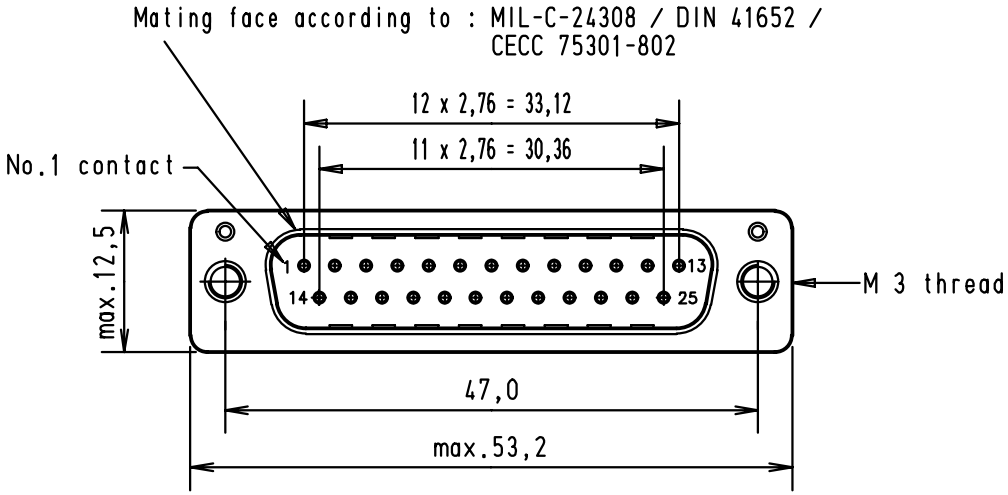


PCB layout hole
component side
( PCB holes plating : Tin )

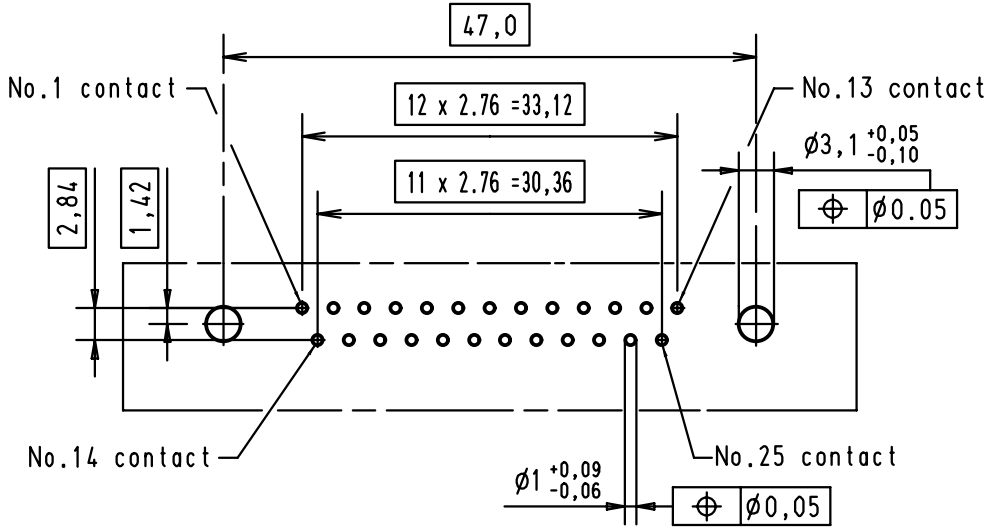


| | | | | | | | |
|---|---|---|---|---|---|---|---|
| | | | | | | | |
| | | | | | | | |
| | | | | | | | |
| 09663247705 | 3 | 5.7 | 4.35 | | | | |
| 09663246705 | 2 | 5.7 | 4.35 | | | | |
| 09663245705 | 0.76 µm Au | 5.7 | 4.35 | | 27980 | 05/03/01 | jfb |
| Part number | Performance level | A ±0.2 | B ±0.2 | | Mod. | Dat. | Name |

| | Dat. | Name |
|---|---|---|
| Detail. | 05/03/01 | jfb |
| Insp. | | |
| Stand. | | |

All Dim. in mm
Orig. Size DIN A 3

D-Sub 25 poles straight male connector with press-in termination,version nut.

Maßstab/ *Scale* 2,5:1

HARTING EURL
F-95972 Paris

TB 0966324x70x

Sub.

Blatt/ *Page* 2