Alle Rechte vorbehalten/ *All rights reserved*

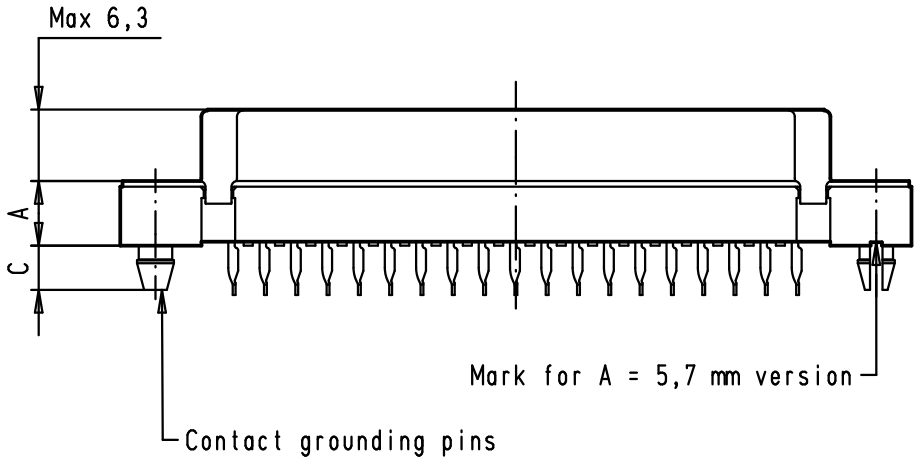

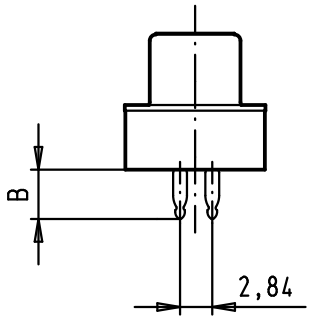

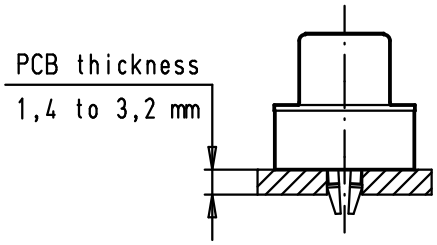

PCB layout, component side
(PCB holes plating: tin)

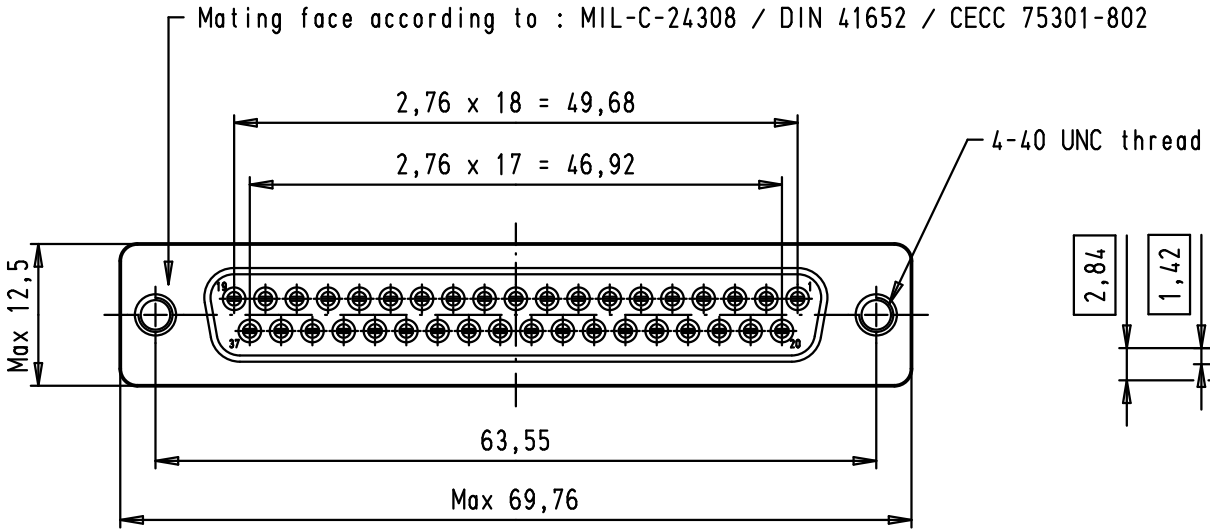

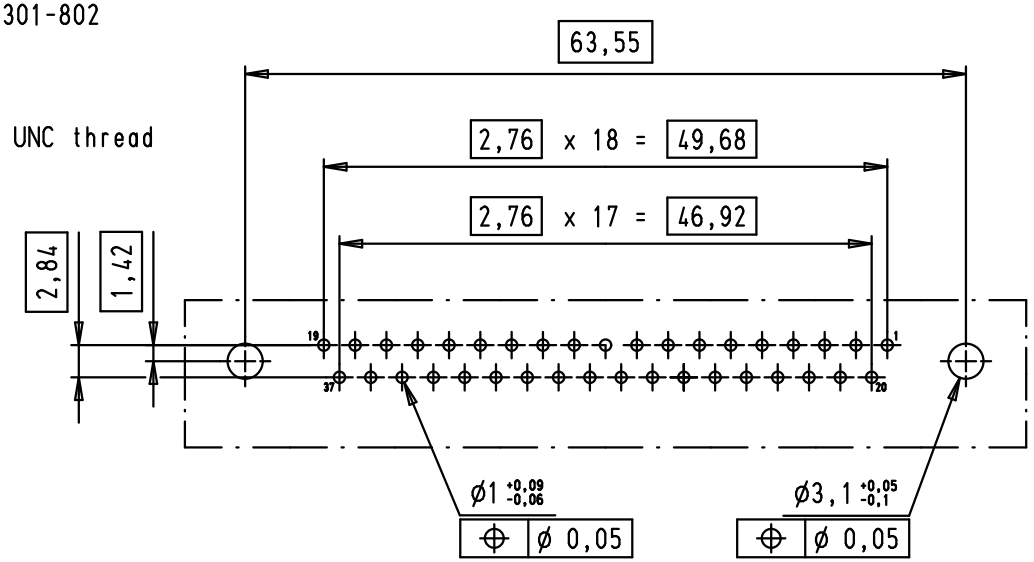

Part number	Performance level	A ±0,2	B ±0,2	Max C	Mod.	Dat.	Name
09 66 454 7512	3	6	4,20	3,5			
09 66 454 6512	2	6	4,20	3,5			
09 66 454 5512	0,76 µm Au	6	4,20	3,5			
09 66 454 7516	3	5,7	4,35	3,9	EC01000	27/11/09	PK
09 66 454 6516	2	5,7	4,35	3,9	27980	05/03/01	JFB
09 66 454 5516	0,76 µm Au	5,7	4,35	3,9	26574	14/02/00	JFB

	Dat.	Name
Detail.	14/02/00	JFB
Insp.		
Stand.		

All Dim. in mm
Orig. Size DIN A4

D-Sub, female, straight, 37 poles, with press-in termination, version contact grounding pins

Maßstab/ *Scale* 1,5:1

HARTING EURL
F-95972 Paris

TB 09 66 454 X51X

Sub.

Blatt/ *Page* 2/3