PRODUCT NUMBER	PLATING NOTE	MATING LENGTH, DIM "X"					
		POSN 1	POSN 2	POSN 3	POSN 4	POSN 5	POSN 6
10061290-555444PLF	NOTE 2	2.60	2.60	2.60	1.10	1.10	1.10
10061290-545555PLF	NOTE 2	2.60	1.10	2.60	2.60	2.60	2.60
10061290-554554PLF	NOTE 2	2.60	2.60	1.10	2.60	2.60	1.10
10061290-555445PLF	NOTE 2	2.60	2.60	2.60	1.10	1.10	2.60

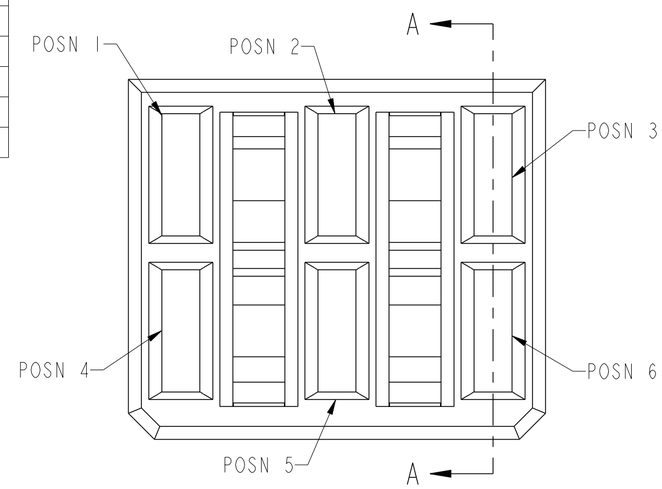

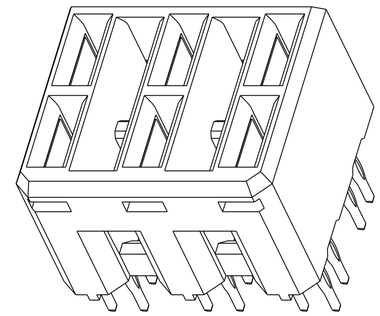

SCALE 4:1

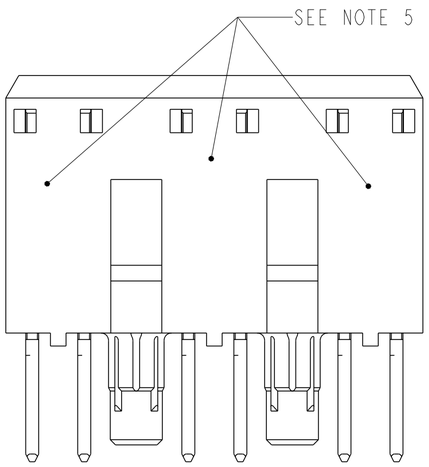

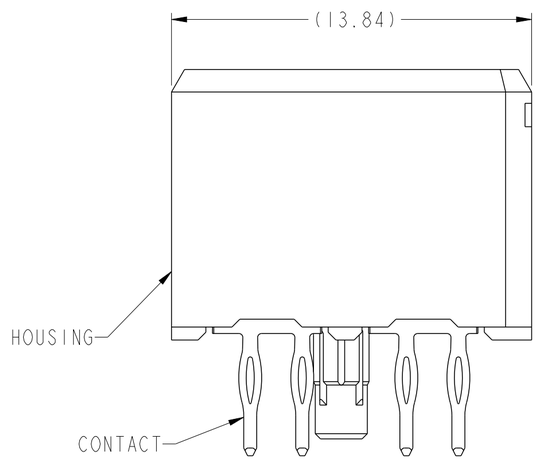

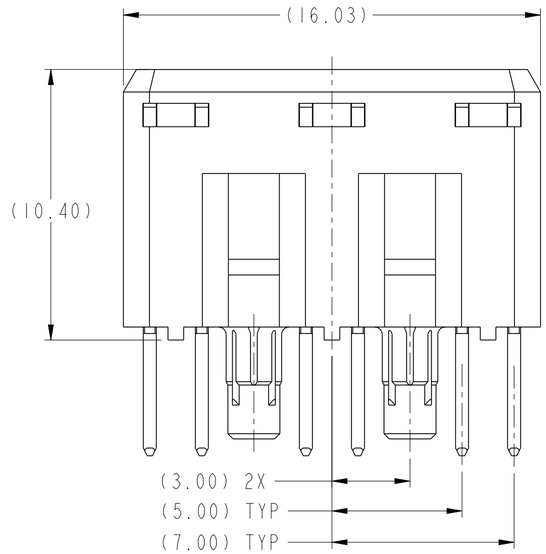

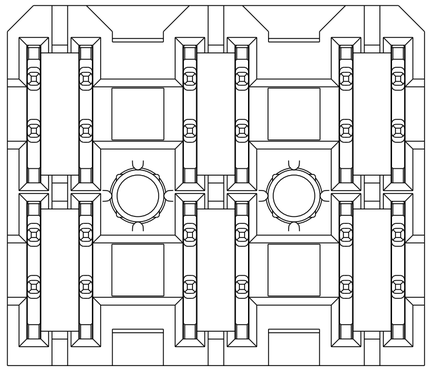

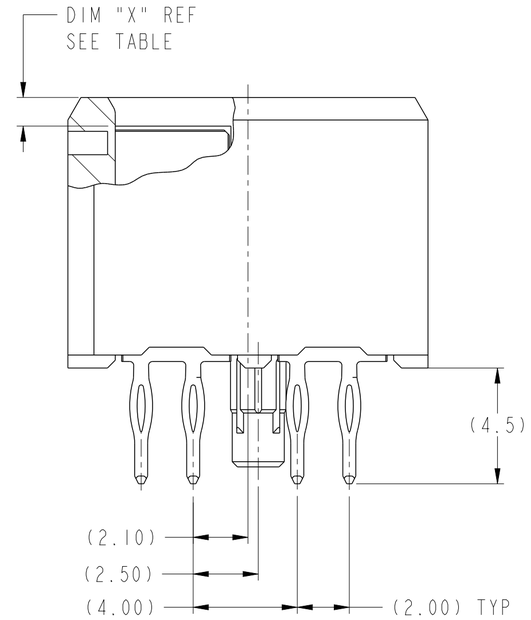

SECTION A-A

Copyright FCI.

spec ref	GS-12-220			dr	Chen-Hong Tan	2006/06/20	
tolerance std ASME Y14.5 -	TOLERANCES UNLESS OTHERWISE SPECIFIED			eng	Suzie Nah	2013/11/24	
				chr	-	-	
				appr	Chen-Hong Tan	2013/11/26	
surface -	linear	0.X	±0.3	title	RECEPTACLE ASSEMBLY POWER 2X3		
		0.XX	±0.10				
		0.XXX	±0.050				
ASME Y14.5	angular	0°	±2°	www.fci.com	cat. no. -	Product - Customer Drw	

projection | MM | size A2 | scale 6:1 | ecn no ELX-S-16353-1 | product family 2mm High Power | rel level **Released** | dwg no 10061290 | rev **F** | sheet 1 of 2

Pro/E File - REV C - 2009-06-09

PDS: Rev :F **STATUS:Released** **Printed: Nov 27, 2013**

TOP LAYER DESCRIPTION	TABLE I PLATED THROUGH-HOLE REQUIREMENTS							
	DRILLED HOLE DIAMETER	COPPER THICKNESS	TIN-LEAD THICKNESS	NICKEL THICKNESS	GOLD THICKNESS	TIN THICKNESS	SILVER THICKNESS	FINISHED HOLE DIAMETER (DIM"A")
TIN-LEAD	0.81-0.86 (0.85 DRILL)	0.025 - 0.050	0.005 - 0.015	--	--	--	--	0.65 - 0.80
IMMERSION TIN	0.81-0.86 (0.85 DRILL)	0.025 - 0.050	--	--	--	0.9 - 1.5um	--	0.70 - 0.80
IMMERSION SILVER	0.81-0.86 (0.85 DRILL)	0.025 - 0.050	--	--	--	--	0.15 - 0.65um	0.70 - 0.80
COPPER (SEE NOTE 11)	0.81-0.86 (0.85 DRILL)	0.025 - 0.050	--	--	--	--	--	0.70 - 0.80
GOLD	0.81-0.86 (0.85 DRILL)	0.025 - 0.050	--	0.003 - 0.007	FLASH UP TO 0.0002	--	--	0.69 - 0.80

NOTES:

1. CONNECTOR MATERIALS:
   HOUSING: HIGH TEMPERATURE THERMOPLASTIC, BLACK
   UL 94V-0 COMPLIANT
   CONTACT: HIGH PERFORMANCE COPPER ALLOY

2. CONTACT PLATING:
   PRESS-FIT TAIL: 0.5 - 1.5um MATT TIN OVER NICKEL.

   SEPARABLE INTERFACE: PERFORMANCE-BASED PLATING, QUALIFIED TO MEET THE REQUIREMENT OF FCI PRODUCT SPECIFICATION GS-12-220, INCLUDING TELCORDIA GR-1217-CORE (NOVEMBER 1995) CENTRAL OFFICE

3. PRODUCT SPECIFICATION: GS-12-220

4. APPLICATION SPECIFICATION: GS-20-023

5. PRODUCT MARKING (PRODUCT NUMBER & LOT CODE) ON HOUSING IN AREA SHOWN, EITHER SIDE.

6. MINIMUM NOMINAL BOARD THICKNESS: 2.4mm

7. REFER TO CUSTOMER DRAWING 10035911 FOR INFORMATION REGARDING PCB LAYOUT OF POWER AND GUIDE MODULES RELATIVE TO AIRMAX SIGNAL MODULES.

8. PRODUCT MEETS EUROPEAN UNION DIRECTIVES AND OTHER COUNTRY REGULATIONS AS DESCRIBED IN FCI SPECIFICATION GS-22-008.

9. PACKAGING MEETS FCI SPECIFICATION GS-14-920

10. HOUSING COMPONENT WILL WITHSTAND EXPOSURE TO 260° PEAK TEMPERATURE FOR 60 SECONDS IN A CONVECTION, INFRA-RED OR VAPOR-PHASE REFLOW OVEN.

11. COPPER PLATING THICKNESS AT CENTER OF VIA HOLE CAN BE NO MORE THAN 0.003 LESS THAN OTHER AREAS.

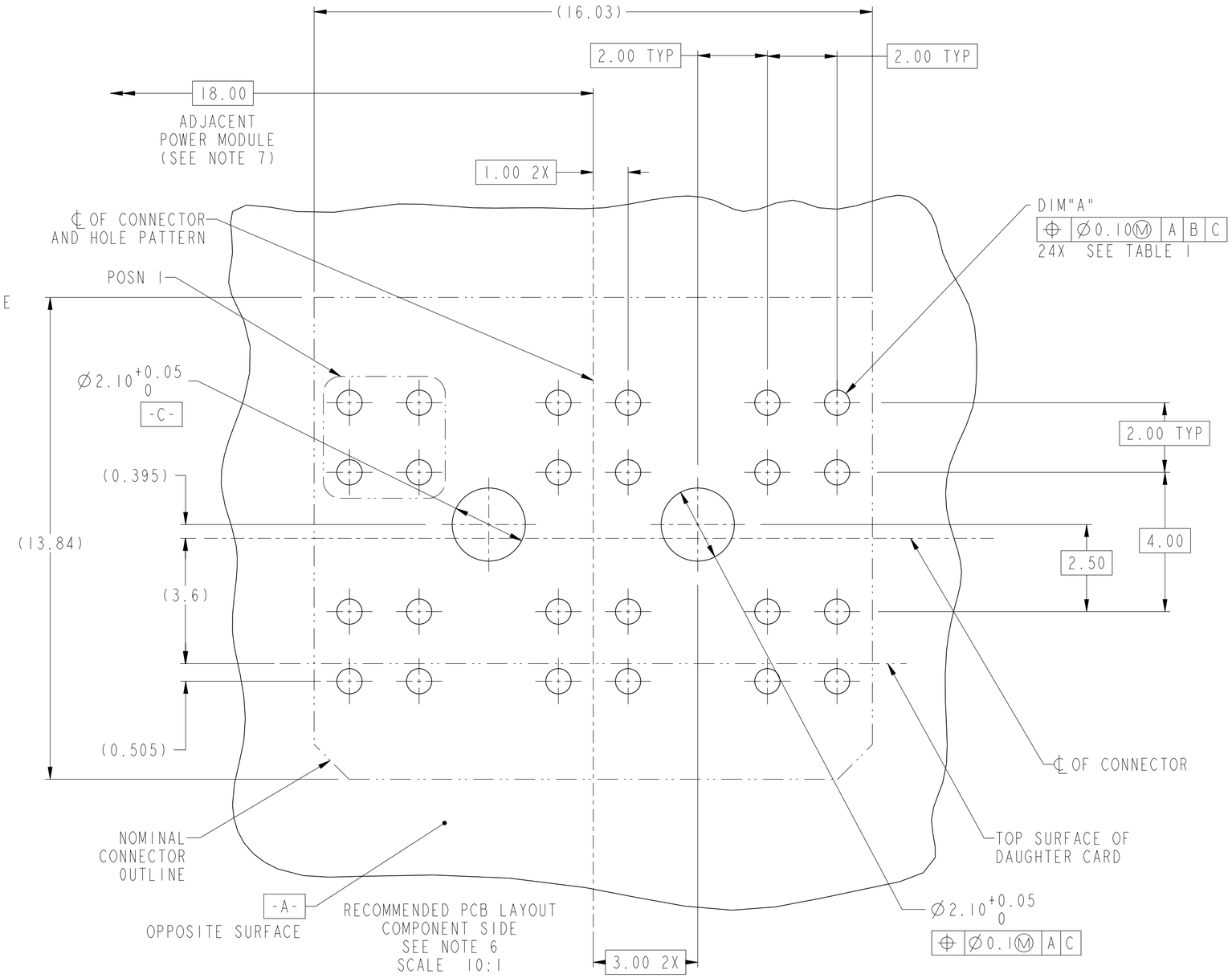

spec ref	GS-12-220	dr	Chen-Hong Tan	2006/06/20	projection	MM	size A2 / scale 10:1
tolerance std ASME Y14.5 -	TOLERANCES UNLESS OTHERWISE SPECIFIED	eng	Suzie Nah	2013/11/24			ecn no ELX-S-16353-1
		chr	-	-			
		appr	Chen-Hong Tan	2013/11/26	product family -		rel level Released
surface -	linear 0.X ±0.3 / 0.XX ±0.10 / 0.XXX ±0.050	FCI	title RECEPTACLE ASSEMBLY POWER 2X3			dwg no 10061290	rev F
ASME Y14.5	angular 0° ±2°	www.fci.com	cat. no. -		Product - Customer Drw		sheet 2 of 2

Copyright FCI.