MICRO SWITCH
FREEPORT ILLINOIS U S A
A DIVISION OF HONEYWELL
FED. MFG. CODE 91929

SWITCH-TOGGLE

CATALOG LISTING
102TL2-12 SERIES
CHART 1

THIS DRAWING COVERS A PROPRIETARY ITEM AND IS THE PROPERTY OF MICRO SWITCH, A DIVISION OF HONEYWELL. THIS DRAWING IS NOT TO BE COPIED OR USED WITHOUT THE APPROVAL OF MICRO SWITCH.

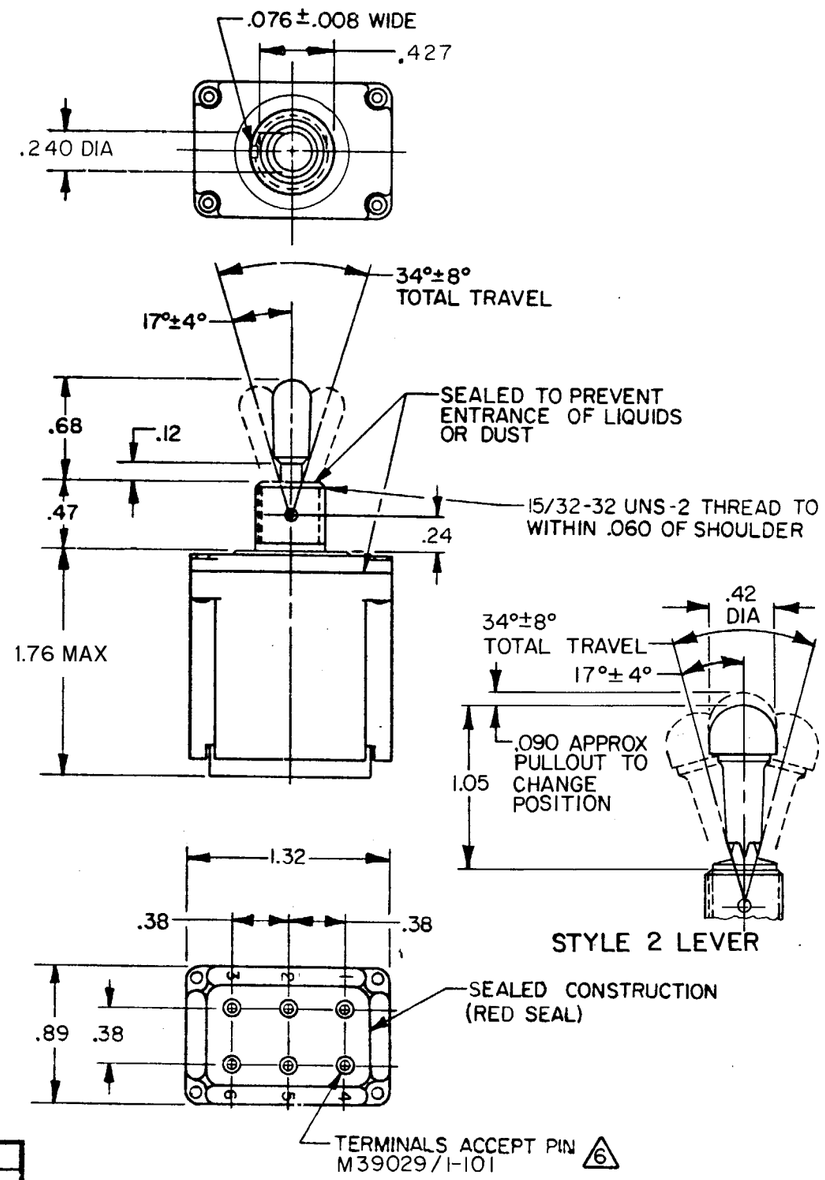

	CATALOG LISTING	AVAILABLE LOCKING COMBINATIONS FOR CONFIGURATION SEE LETTERING DETAILS	STYLE NUMBER	CURRENT CAPACITY (AMPS)								
				RESISTIVE LOAD DC VOLTS			AC VOLTS		LAMP LOAD		INDUCTIVE LOAD	
				28	125	250	125	250	28 VDC	125 VAC	28 VDC	125 VAC
	102TL2-12	NONE	1	20	.75	.5	15	6	7	4	15	15
	102TL2-12 8	A,B,D,E,F,G,H,J,K,L,M,N,P	2									

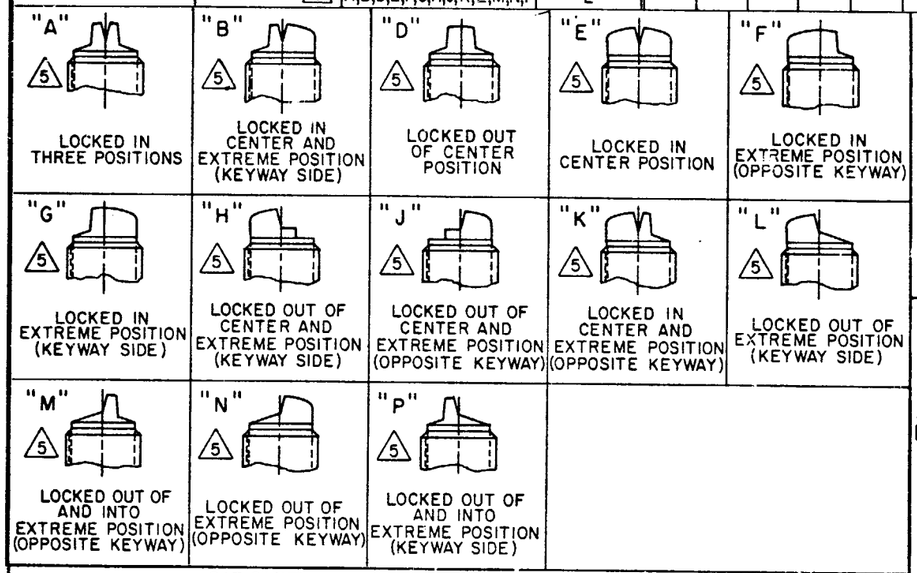

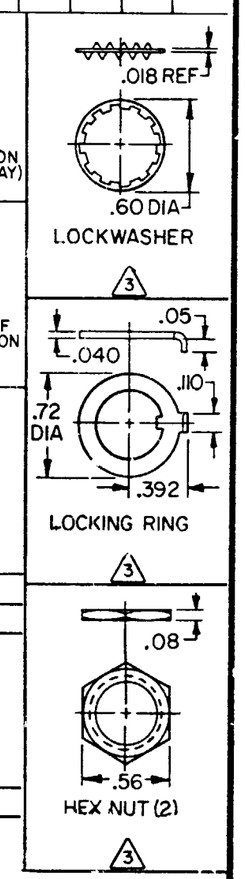

NOTES
1 - SWITCHES ARE CAPABLE OF WITHSTANDING A TEMPERATURE OF 160°F CONTINUOUSLY AT FULL RATED LOAD
2 - CIRCUIT DESIGNATION AND MICRO SWITCH CATALOG LISTING STAMPED ON SIDE OF SWITCH
3 FURNISHED UNASSEMBLED
4 - UNUSED TERMINAL HOLES MAY BE SEALED WITH PLUGS M83723/28-20
5 APPLIES ONLY TO "ON" AND "MOMENTARY ON" POSITIONS
6 THE SEALING GROMMET SHALL SEAL ON A SMOOTH WIRE INSULATION OF .040 TO .083 DIAMETERS (16-20 GAGE)

8 SUFFIX LETTER MUST BE ADDED FOR DESIRED TYPE OF TOGGLE LOCKING. SEE CHART FOR AVAILABLE LOCKING COMBINATIONS

DRAWING NUMBER 102TL2-12 SERIES CHART 1
PAGE 1 OF 1
RELEASE NO. PR-8815
REPLACES
ISSUE M 7

REVISIONS

A	CO 50496	TSK 16 NOV 81
B	C056074	GJW 21 NOV 84
C	C057478	TAD 12 JUL 85
D	C058727	TSK 22 JAN 86
E	C058436	JAP 9 APR 86
F	CO-95233	JJA 6 JULY 99

CHECK 14 MAY 80
CHECK
CHECK
CHECK 12 MAY 80
DRAWN WJM

FORMTEK FO-5285-1-A

SCALE FULL
DO NOT SCALE PRINT
UNLESS OTHERWISE NOTED
DIMENSIONS ARE IN INCHES
TOLERANCES ARE:

ONE PLACE	(.0)	±.030
TWO PLACE	(.00)	±.015
THREE PLACE	(.000)	±.005
ANGLES		±

WEIGHT .135 LBS MAX