MICRO SWITCH
FREEPORT ILLINOIS U S A
A DIVISION OF HONEYWELL
FED. MFG. CODE 91929

SWITCH-TOGGLE

CATALOG LISTING
102TL2218 SERIES
CHART 1

THIS DRAWING COVERS A PROPRIETARY ITEM AND IS THE PROPERTY OF MICRO SWITCH, A DIVISION OF HONEYWELL. THIS DRAWING IS NOT TO BE COPIED OR USED WITHOUT THE APPROVAL OF MICRO SWITCH.

CATALOG LISTING	CIRCUIT MADE WITH TOGGLE LEVER IN (5) KEYWAY SIDE (1-2,4-5)	CENTER (1-2,4-5)	OPPOSITE KEYWAY (2-3,5-6)	MILITARY RATING (AMPS) RESISTIVE LOAD DC VOLTS 28	125	250	AC VOLTS 125	250	LAMP LOAD 28 VDC	125 VAC	INDUCTIVE LOAD 28 VDC	125 VAC
102TL2218-1	ON	OFF	ON	7.5	.75	.5	7.5	6	7	4	7.5	7.5
Ⓓ	OFF	NONE	ON									
102TL2218-3	ON	NONE	ON									
102TL2218-21	NONE	OFF	ON									
102TL2218-31	NONE	ON	ON									
102TL2218-4	MOM OFF	NONE	ON	7.5	.75	.5	7.5	6	5	2	7.5	7.5
102TL2218-5	MOM ON	OFF	ON									
102TL2218-6	MOM ON	NONE	OFF									
102TL2218-7	MOM ON	OFF	MOM ON									
102TL2218-8	MOM ON	NONE	ON									
102TL2218-51	NONE	ON	MOM ON									
102TL2218-61	MOM ON	OFF	NONE									

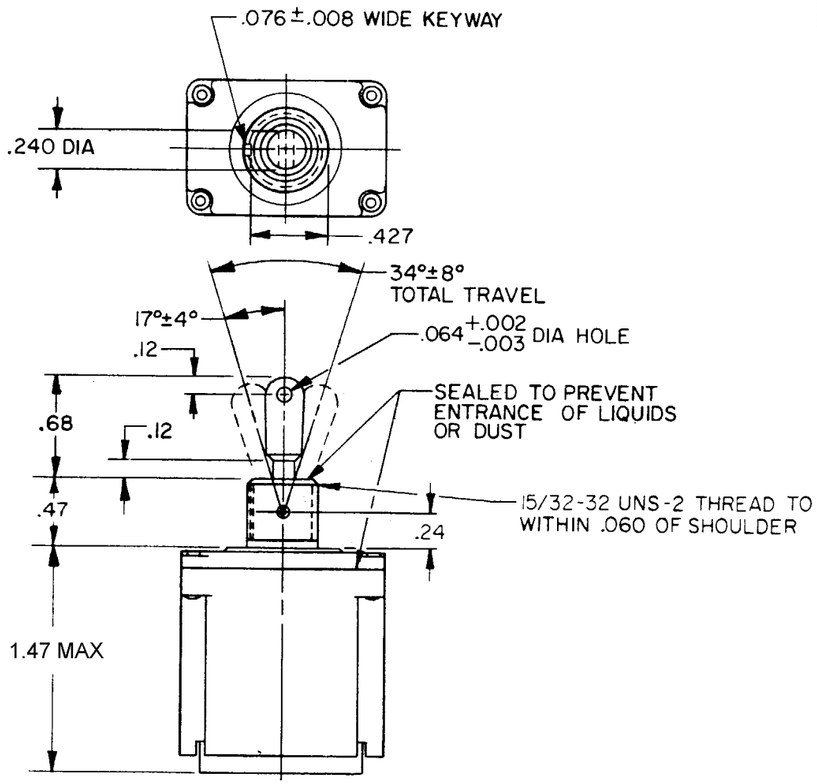

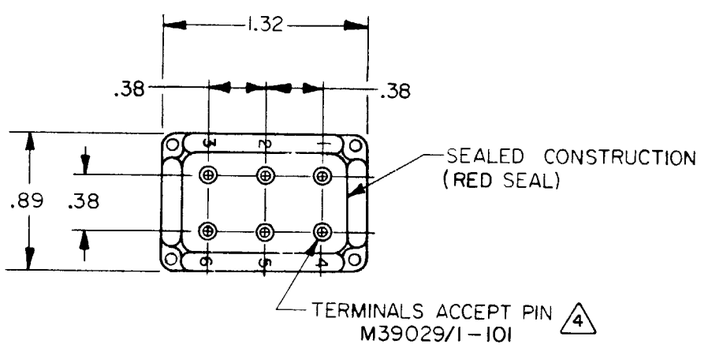

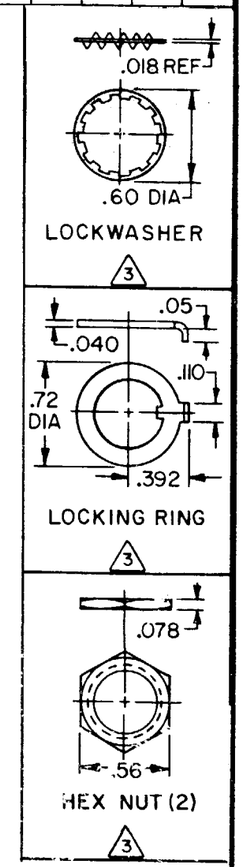

NOTES
1 - SWITCHES ARE CAPABLE OF WITHSTANDING A TEMPERATURE OF 160°F CONTINUOUSLY AT FULL RATED LOAD
2 - CIRCUIT DESIGNATION, MICRO SWITCH CATALOG LISTING AND DATE CODE IDENTIFIED ON SIDE OF SWITCH
(3) FURNISHED UNASSEMBLED
(4) THE SEALING GROMMET SHALL SEAL ON A SMOOTH WIRE INSULATION OF .040 TO .083 DIAMETER (16 TO 20 GAGE)
(5) APPLIES TO "ON" AND "MOMENTARY ON" POSITIONS
6 - UNUSED TERMINAL HOLES MAY BE SEALED WITH PLUGS M83723/28-20

SCALE FULL
DO NOT SCALE PRINT
UNLESS OTHERWISE NOTED
DIMENSIONS ARE IN INCHES
TOLERANCES ARE:
ONE PLACE (.0) ±.030
TWO PLACE (.00) ±.015
THREE PLACE (.000) ±.005
ANGLES ±
WEIGHT .135 LB MAX

RASTER
DRAWN GLH 17 JAN 86
CHECK CEC 17 JAN 86
CHECK KJC 17 JAN 86
CHECK
REPLACES
RELEASE NO. PR-14461
CATALOG LISTING 102TL2218 SERIES CHART 1
PAGE 1 OF 1
ISSUE 5
M

REVISIONS
A C092297 J A K 16 FEB 98
B CO-93999 J J A 7 JULY 99
C 201413 C S L 3 OCT 00
D 203737 C S L 12 SEP 01