CONNECTOR P/N	øD (µm)	ød (µm)	HOUSING COLOR	BOOT COLOR	CABLE TYPE
106024-2500	125.50 $^{+0.50}_{0}$	1.0	BLUE	WHITE	SINGLE MODE
106024-2512				RED	
106024-3550*	127.00 $^{+3.00}_{0}$	3.0	BEIGE	WHITE	MULTIMODE
106024-3500					
106024-3530				BLUE	
106024-4500	125.00 $^{+0.50}_{0}$	1.0	BLUE	WHITE	SINGLE MODE
106024-5500	126.00 $^{+1.00}_{0}$				
106024-5540*					
106024-5580				RED	
106024-5590				BLUE	
106024-6500	125.25 $^{+0.50}_{0}$			WHITE	
106090-2700	125.50 $^{+0.50}_{0}$	0.5			
106090-4500	125.00 $^{+0.50}_{0}$				
106090-6500	125.25 $^{+0.50}_{0}$				
106090-4510	125.2-125.5				
106090-4520	125.51-125.9				
106099-0500	81.0±0.5	1.4			
106024-2513	125.50 $^{+0.50}_{0}$	0.5		YELLOW	
106024-5530	126.00 $^{+1.00}_{0}$	1.0	BEIGE	WHITE	

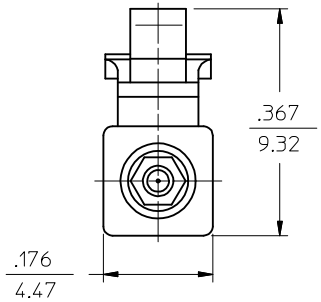

(DUST CAP NOT SHOWN)

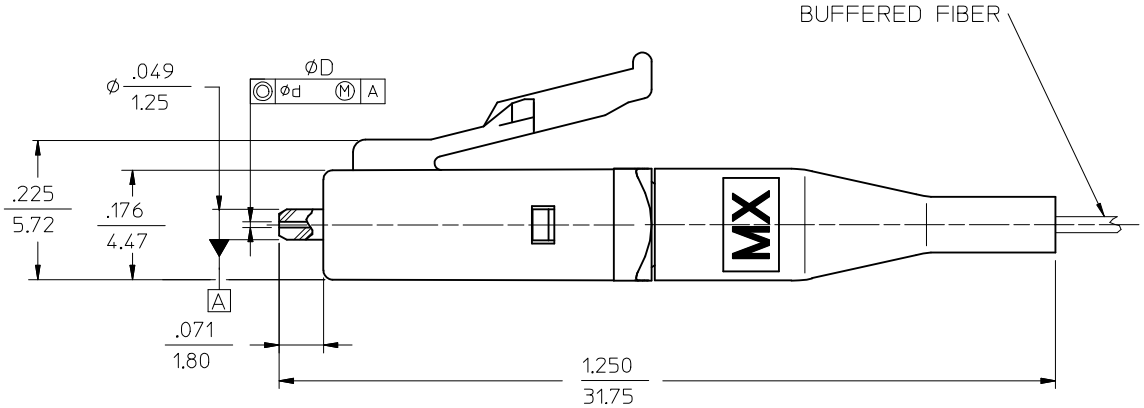

NOTE:

1. ALL DIMENSIONS ARE GIVEN IN INCHES/MM, EXCEPT OTHERWISE SPECIFIED.

*2. P/N 106024-3310 AND 106024-5540 ARE BULK PACKED.

ENTER DESCRIPTION
EC NO: MF2013-0244 2012/10/29
DRWN:KPEYZNER
CHKD:
APPR:IGUMIN 2012/10/31
DESCRIPTION
A1
REV

QUALITY SYMBOLS
▼=0
Ⓒ=0

GENERAL TOLERANCES (UNLESS SPECIFIED)

	mm	INCH
4 PLACES	± ---	± ---
3 PLACES	± 0.38	± .005
2 PLACES	± 0.013	± .015
1 PLACE	± ---	± ---
0 PLACE	±	±

ANGULAR ± 1 °
DRAFT WHERE APPLICABLE MUST REMAIN WITHIN DIMENSIONS

DIMENSION STYLE: IN/MM
SCALE: 5:1
DESIGN UNITS: INCH
THIRD ANGLE PROJECTION

DRAWN BY: PGIBLIN DATE: 2005/09/02
CHECKED BY DATE
APPROVED BY DATE

TITLE: LC CONNECTOR (BARE FIBER)

molex

MATERIAL NO.: SEE TABLE
DOCUMENT NO.: SD-1060KK-KKK0
SHEET NO.: 1 OF 1
SIZE: B

THIS DRAWING CONTAINS INFORMATION THAT IS PROPRIETARY TO MOLEX INCORPORATED AND SHOULD NOT BE USED WITHOUT WRITTEN PERMISSION