REVISIONSVERLAUF				
ZONE	REV	BEZEICHNUNG	DATUM	GENEHMIGT
-	01	INITIAL RELEASE	12.7.2006	FP

A-A

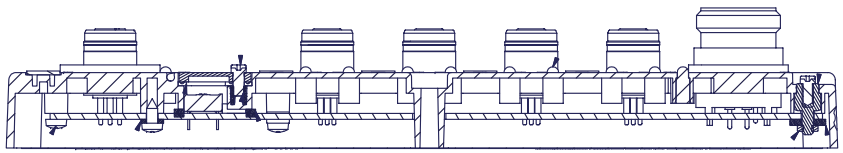

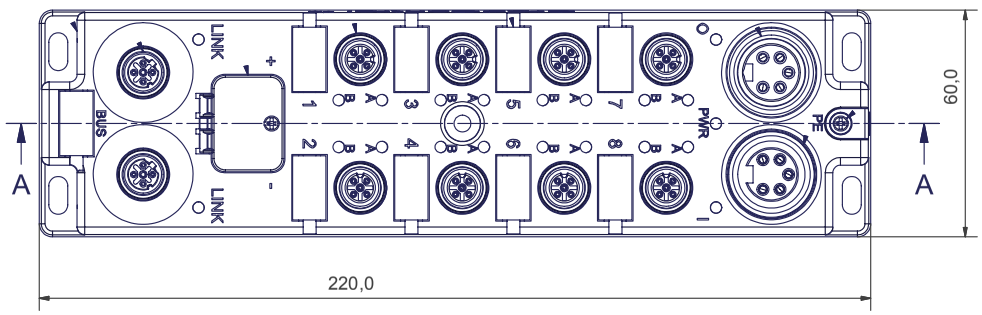

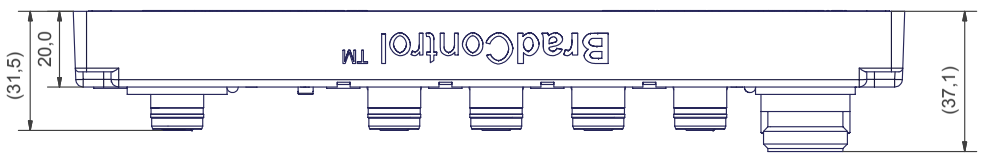

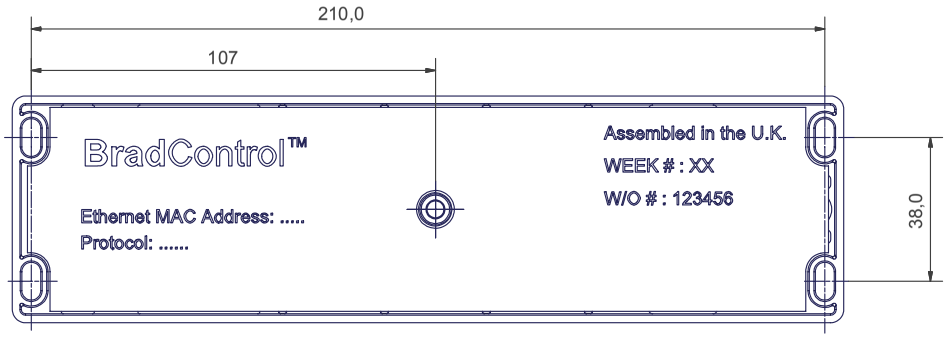

IP67 I/O (1 : 2)
Window open (105°)

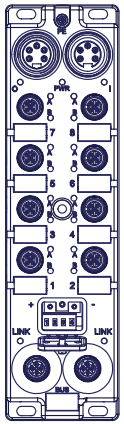

IP67 I/O connected (1 : 2)

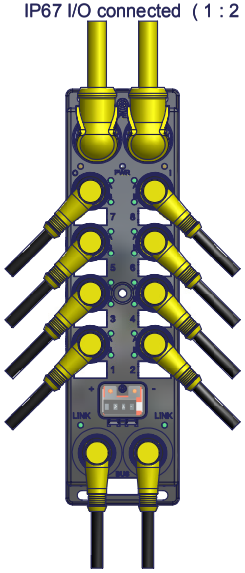

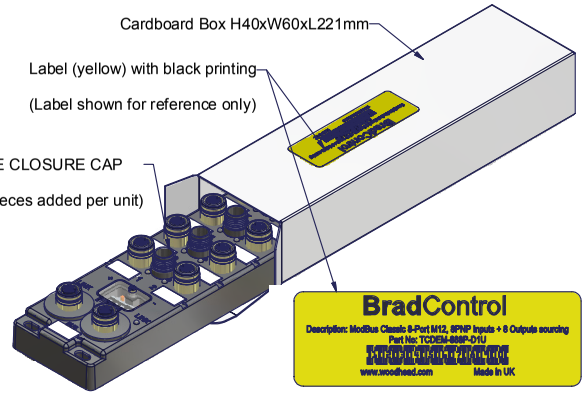

FINAL PART NUMBERS (Configured Variantions):

TCDEM-8D0P-D1U	16 inputs PNP
TCDEM-8C2P-D1U	14 inputs PNP, 2 outputs sourcing (twin wired)
TCDEM-8B4P-D1U	12 inputs PNP, 4 outputs sourcing
TCDEM-888P-D1U	8 inputs PNP, 8 outputs sourcing
TCDEM-8D0N-D1U	16 inputs NPN,
TCDEM-8C2N-D1U	14 inputs NPN, 2 outputs sinking (twin wired)
TCDEM-8B4N-D1U	12 inputs NPN, 4 outputs sinking
TCDEM-888N-D1U	8 inputs NPN, 8 outputs sinking
TCDEM-8YYX-D1U	16 Universal input / output channels

X (2 : 1)
shown without Window Seal

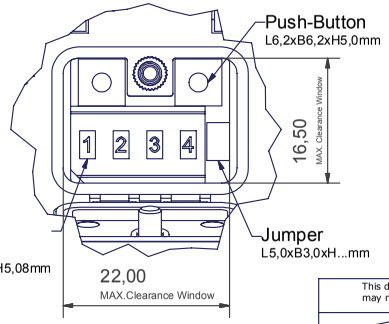

Display
HCMS 2902
L17,78xB10,16xH5,08mm

Through Loop X02
(5P MC, PWR OUT FEMALE)

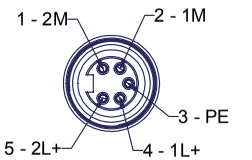

Supply X01
(5P MC, PWR IN MALE)

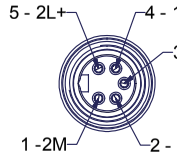

I/O Port
(5P FEM REC, A-Code))

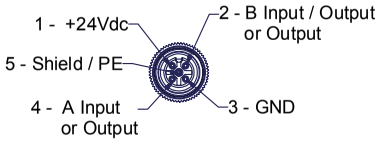

Bus Connection
(4P FEM REC; D-Code)

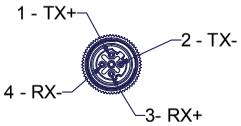

BOM / Stückliste

This drawing and its contents are the proprietary and confidential property of Woodhead Industries Inc. and/or its subsidiariesand may not be used or disclosed to others without the express prior written consent of Woodhead Industries Inc. and/or its subsidiaries.

PROJECTION 1 : GER

UNLESS OTHERWISE SPECIFIED
X = ± 1
X.X = ± 0,1
X.XX = ± 0,05
Winkel = 1°

	Date	Name
PROC	12.07.2006	FP
CHK		
Norm.		

Woodhead Connectivity GmbH
Gewerbestraße 60
75015 Bretten-Gölshausen
Tel.: 07252/9496-0
Fax: 07252/9496-199

Rev.	Change	Date	Name
01	SEE REV TABLE	12.07.06	FP

Scale 1>1 | Dimensions mm
Material -
Finish -

IP67 MODBUS I/O
CLASSIC DIGITAL - 60MM HSG

TCDEM-8

Sheet 1
A2

Filename Y:\CAD\ETHERNET ModBus IP67 IO\DRAWINGS\TCDEM-8.idw