MICRO SWITCH
a Honeywell Division
FED. MFG. CODE 91929

SWITCH - TOGGLE

CATALOG LISTING
11NT1 SERIES CHART 1

THIS DRAWING COVERS A PROPRIETARY ITEM AND IS THE PROPERTY OF MICRO SWITCH. A DIVISION OF HONEYWELL. THIS DRAWING IS NOT TO BE COPIED OR USED WITHOUT THE APPROVAL OF MICRO SWITCH

CATALOG LISTING	CIRCUIT MADE WITH TOGGLE LEVER IN (4) KEYWAY SIDE (1-2)	CENTER (1-2)	OPPOSITE KEYWAY (2-3)	ELECTRICAL DATA
(A)	ON	OFF	ON	L191 15A 125, 250, 277 VAC 1/2HP 125 VAC 1HP 250, 277 VAC 5A 125 VAC "L"
11NT1-2	OFF	NONE	ON	
11NT1-3	ON	NONE	ON	
(A)	NONE	OFF	ON	
(A)	NONE	ON	ON	
(A)	MOM OFF	NONE	ON	L192 10A 125, 250, 277 VAC 1/4HP 125 VAC, 1/2HP 250, 277 VAC 3A 125 VAC "L"
11NT1-5	MOM ON	OFF	ON	
11NT1-6	MOM ON	NONE	OFF	
11NT1-7	MOM ON	OFF	MOM ON	
(A)	MOM ON	NONE	ON	
(A)	NONE	ON	MOM ON	
(A)	MOM ON	OFF	NONE	

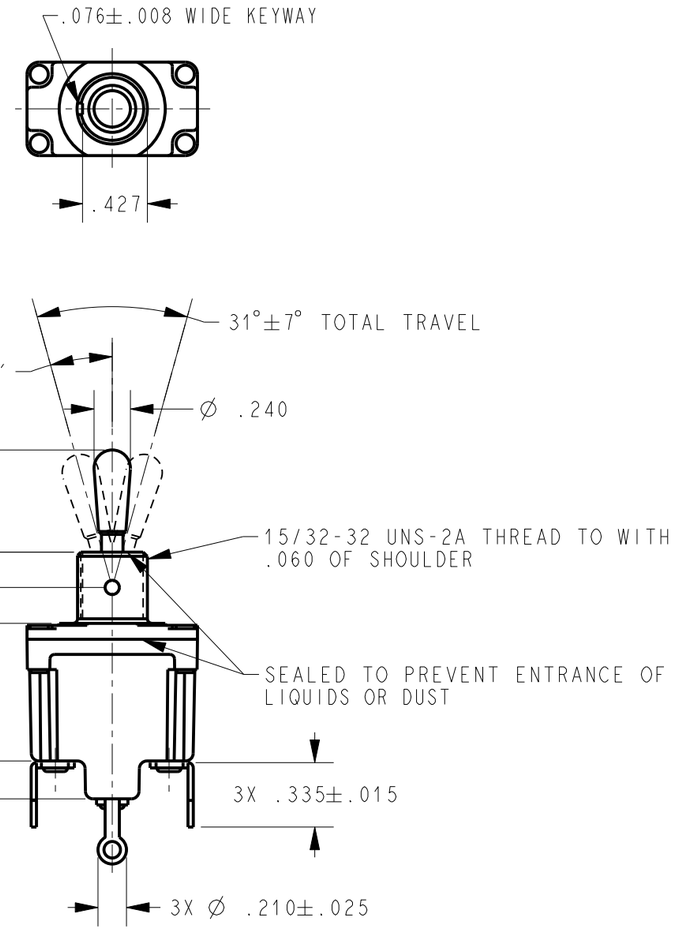

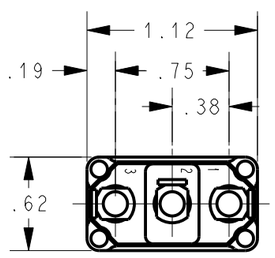

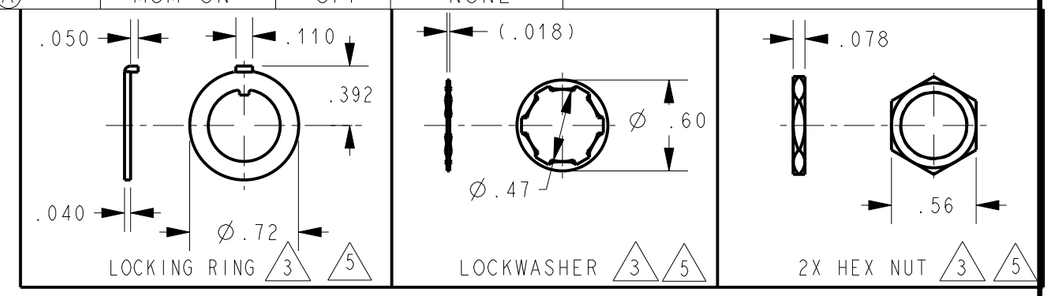

NOTES
1 - SWITCH WILL WITHSTAND TEMPERATURE OF 160°F CONTINUOUSLY AT FULL RATED LOAD
2 - MICRO SWITCH CAT. LIST. MARKED ON SIDE OF SWITCH
(3) FURNISHED UNASSEMBLED
(4) APPLIES ONLY TO "ON" AND "MOMENTARY ON" POSITIONS
(5) NH SUFFIX MUST BE ADDED TO SPECIFY NO HARDWARE (EX. 11NT1-7-NH)

THIRD ANGLE PROJECTION
SCALE FULL
DO NOT SCALE PRINT

UNLESS OTHERWISE SPECIFIED TOLERANCES ARE		
ONE PLACE	(.0)	±.030
TWO PLACE	(.00)	±.015
THREE PLACE	(.000)	±.005
ANGLES		±

WEIGHT .07 LB APPROX

ANSI Y14.5M-1982 APPLIES

CATALOG LISTING 11NT1 SERIES CHART 1
PAGE 1 OF 1
RELEASE NO. PR-19402
REPLACES -
ISSUE 10

REVISIONS			
A	C095305	TSM 10NOV99	22JUN04
B	CO-94328	SAV 22 NOV 99	
C	203878	TSM 10 SEP 01	AK
D	206796	CSL 18 NOV 02	CHECK
E	207782	CSL 27 MAR 03	
F	0000263	JAH 09MAY03	10NOV99
G	0006142	VPA 22JUN04	

CHECK 22JUN04
CHECK AK
SAV 10NOV99
CHECK
DRAWN TSM 10NOV9
PTC/CAD 2D