MICRO SWITCH
FREEPORT ILLINOIS, U S A
A DIVISION OF HONEYWELL
FED. MFG. CODE 91929

SWITCH-TOGGLE

CATALOG LISTING
12TL1-10 SERIES
CHART 1

THIS DRAWING COVERS A PROPRIETARY ITEM AND IS THE PROPERTY OF MICRO SWITCH, A DIVISION OF HONEYWELL. THIS DRAWING IS NOT TO BE COPIED OR USED WITHOUT THE APPROVAL OF MICRO SWITCH.

MILITARY STANDARD NUMBER	CATALOG LISTING	AVAILABLE LOCKING COMBINATIONS FOR CONFIGURATION SEE LETTERED DETAILS	STYLE NUMBER	MILITARY RATING (AMPS) RESISTIVE LOAD DC VOLTS 28	125	250	AC VOLTS 125	250	LAMP LOAD 28 VDC	125 VAC	INDUCTIVE LOAD 28 VDC	125 VAC
MS27735-1	12TL1-10	NONE	1	20	.75	.5	15	6	7	4	15	15
MS27738-1 (6)	12TL1-10 (6)	A,B,D,E,F,G,H,J,K,L,M,N,P	2									

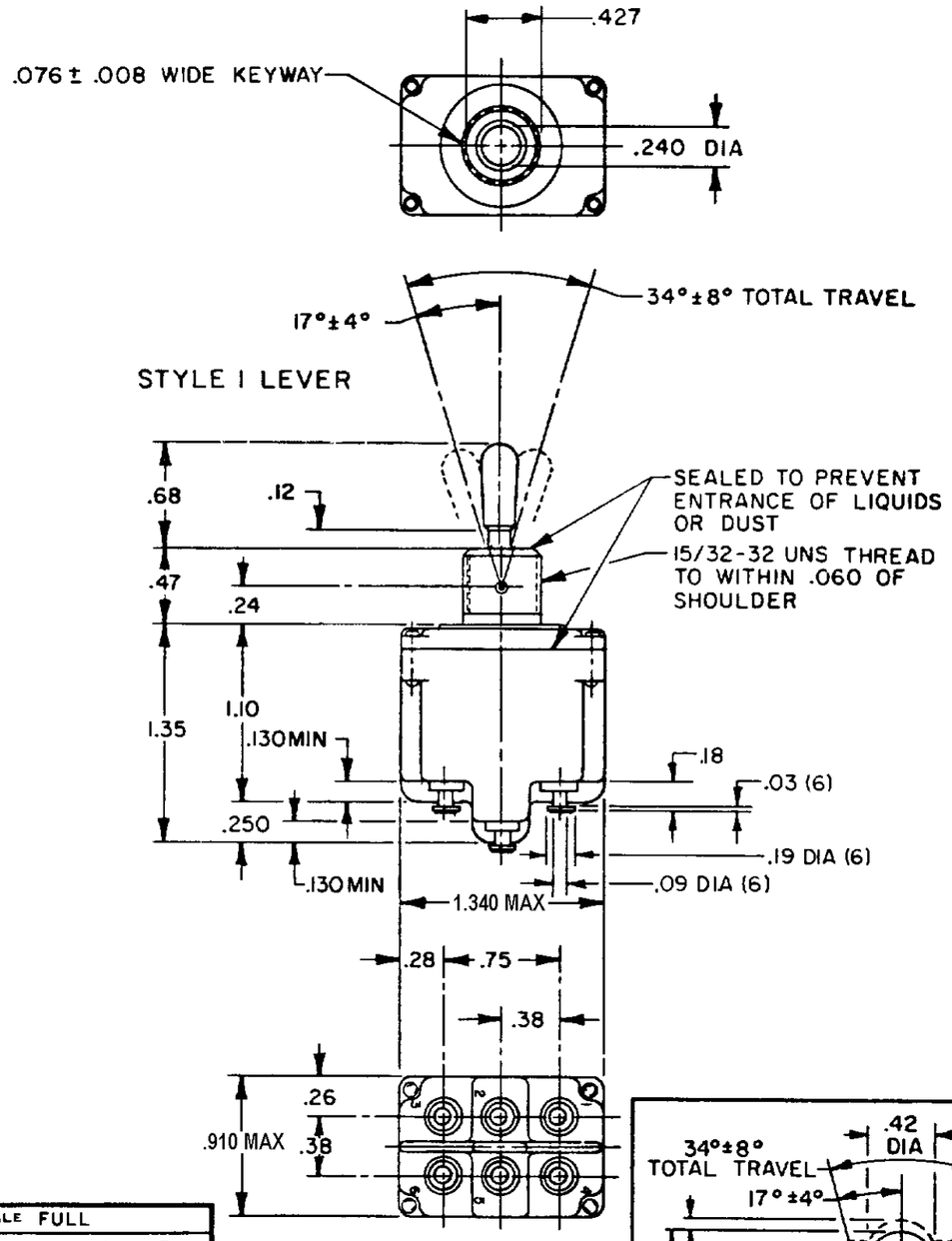

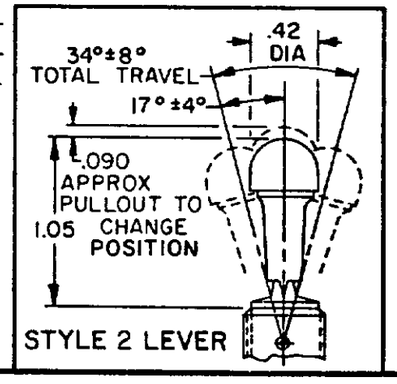

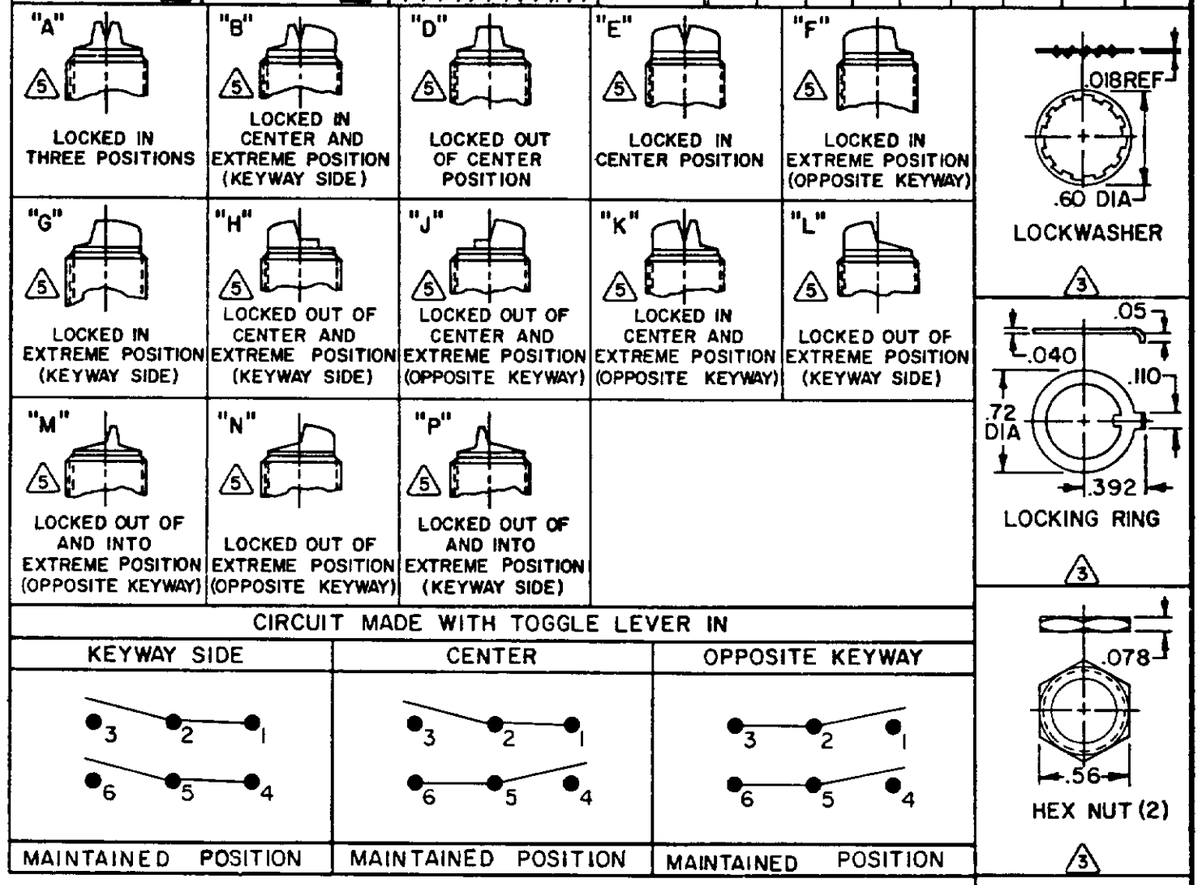

CIRCUIT MADE WITH TOGGLE LEVER IN		
KEYWAY SIDE	CENTER	OPPOSITE KEYWAY
MAINTAINED POSITION	MAINTAINED POSITION	MAINTAINED POSITION

NOTES
1 - SWITCHES ARE CAPABLE OF WITHSTANDING A TEMPERATURE OF 160°F CONTINUOUSLY AT FULL RATED LOAD
2 - CIRCUIT DESIGNATION AND MICRO SWITCH CATALOG LISTING AND MS NUMBER STAMPED ON SIDE OF SWITCH
(3) FURNISHED UNASSEMBLED
4 - FOR TERMINAL COVER SEE MICRO SWITCH CAT. LIST. 5PA8
(5) KEYWAY SHOWN ON LEFT SIDE
(6) SUFFIX LETTER MUST BE ADDED FOR DESIRED TYPE OF TOGGLE LOCKING. SEE CHART FOR AVAILABLE LOCKING COMBINATIONS

SCALE FULL
DO NOT SCALE PRINT
UNLESS OTHERWISE NOTED
DIMENSIONS ARE IN INCHES
TOLERANCES ARE
ONE PLACE (0) ±.030
TWO PLACE (00) ±.015
THREE PLACE (000) ±.005
ANGLES ±1°
WEIGHT .15 LB APPROX

15A-125, 250 OR 277 VAC
1/2HP-125VAC; 1HP-250, 277VAC
5A-125VAC "L" CODE L191

CATALOG LISTING 12TL1-10 SERIES CHART 1
PAGE 1 OF 1
RELEASE NO CO-78465
REPLACES 12TL1-10 SERIES
ISSUE 3
REVISIONS
A CO-94428 CSL 28 NOV 99
B 0003086 RS 05 FEB 04
CHECK 05 FEB 04 MDM
CHECK 23 JUN 94 KAG
CHECK 10 JUN 94
DRAWN L JF
FORMTEK