MICRO SWITCH
FREEPORT, ILLINOIS, U S A
A DIVISION OF HONEYWELL
FED. MFG. CODE 91929

SWITCH – TOGGLE

CATALOG LISTING
12TW1-50 SERIES
CHART 1

THIS DRAWING COVERS A PROPRIETARY ITEM AND IS THE PROPERTY OF MICRO SWITCH, A DIVISION OF MINNEAPOLIS-HONEYWELL REGULATOR CO. THIS DRAWING IS NOT TO BE COPIED OR USED WITHOUT THE APPROVAL OF MICRO SWITCH.

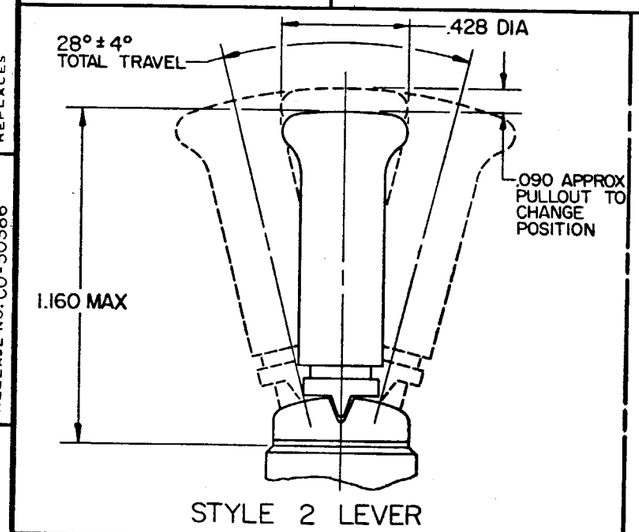

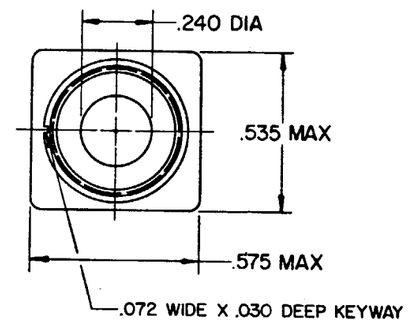

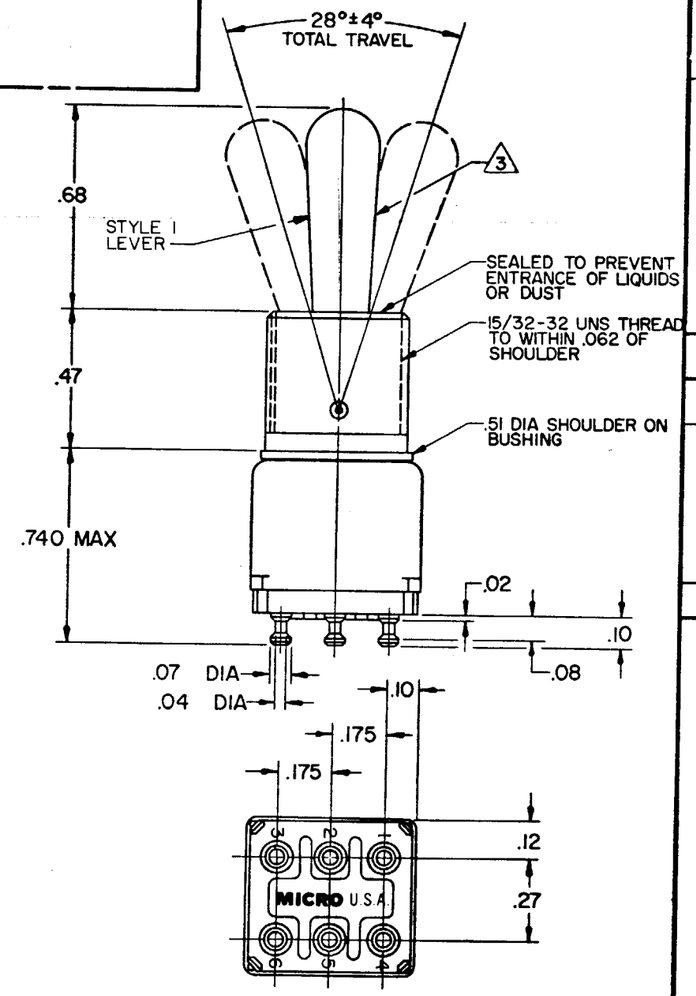

CAT. LIST.	AVAILABLE LOCKING COMBINATIONS FOR CONFIGURATION SEE LETTERED DETAILS	STYLE NO.	ELECTRICAL DATA	MS NUMBER
			–L117– 5A-125 VAC	
12TW1-50		1		MS27753-39
12TW1-50	E,F, K,L,M,N	2		MS27754-39 △4

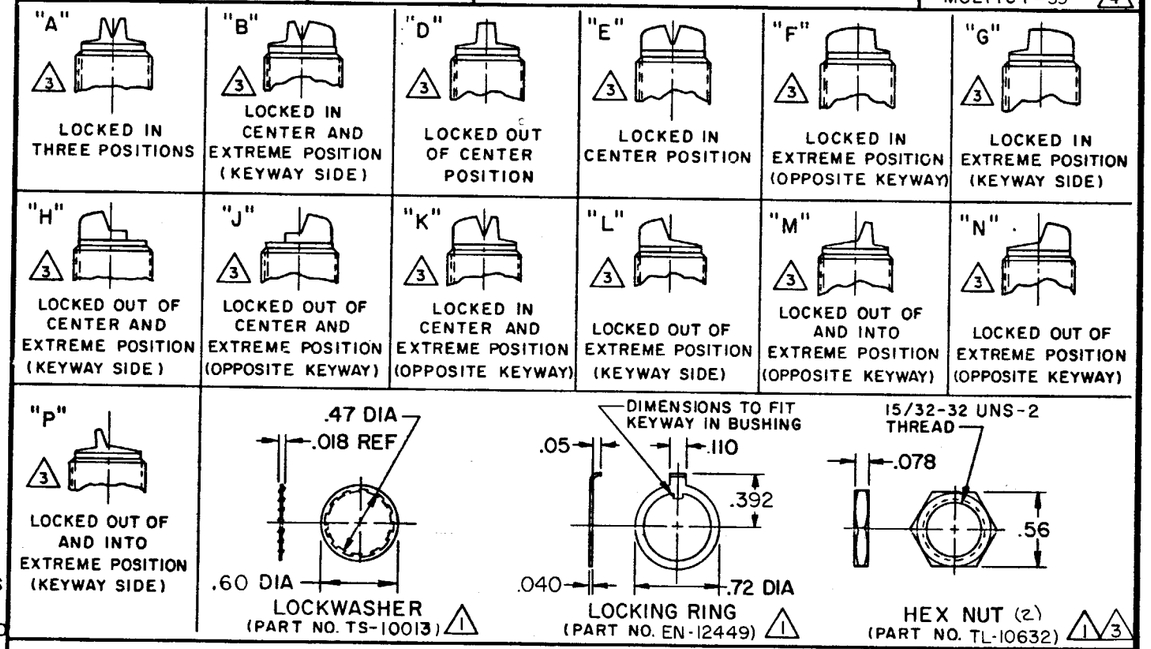

CIRCUIT DIAGRAM

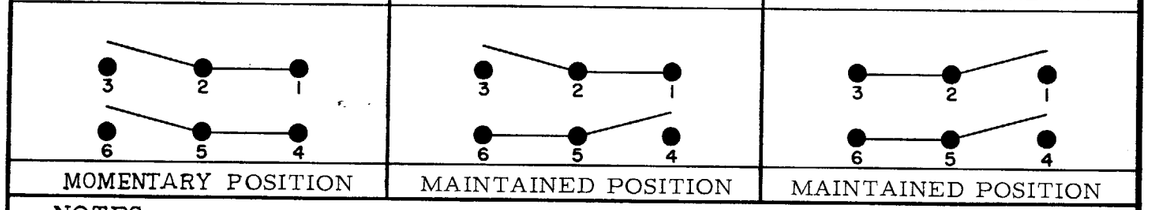

NOTES
△1 FURNISHED UNASSEMBLED
2 - TERMINALS ARE PLATED FOR SOLDERING
△3 MATTE FINISH
△4 SUFFIX LETTER MUST BE ADDED FOR DESIRED TYPE TOGGLE LOCKING. SEE CHART FOR AVAILABLE LOCKING COMBINATIONS.

SCALE 2 TO 1
DO NOT SCALE PRINT
UNLESS OTHERWISE NOTED
DIMENSIONS ARE IN INCHES
TOLERANCES ARE:
ONE PLACE (.0) ±.030
TWO PLACE (.00) ±.015
THREE PLACE (.000) ±.005
ANGLES ±
WEIGHT

M 12TW1-50 SERIES
DRAWING NUMBER 7
ISSUE X
REPLACES
RELEASE NO. CO-30386
CHECK
REVISIONS
A CO 32243 GLH 20 JUN 73
B C050565 CJH 16 DEC 81
C C056672 JAS 4 FEB 85
D C058417 KEW 6 DEC 85
E C061252 JAP 13 MAR 87
F C062939 TSK 24 FEB 88
DRAWN MJB 12 APR 72
FO-52854