MICRO SWITCH
FREEPORT, ILLINOIS U.S.A.
A DIVISION OF HONEYWELL
FED MFG CODE 91929

SWITCH–TOGGLE

CATALOG LISTING
12 TW48 SERIES
CHART 1

THIS DRAWING COVERS A PROPRIETARY ITEM AND IS THE PROPERTY OF MICRO SWITCH A DIVISION OF HONEYWELL. THIS DRAWING IS NOT TO BE COPIED OR USED WITHOUT THE APPROVAL OF MICRO SWITCH.

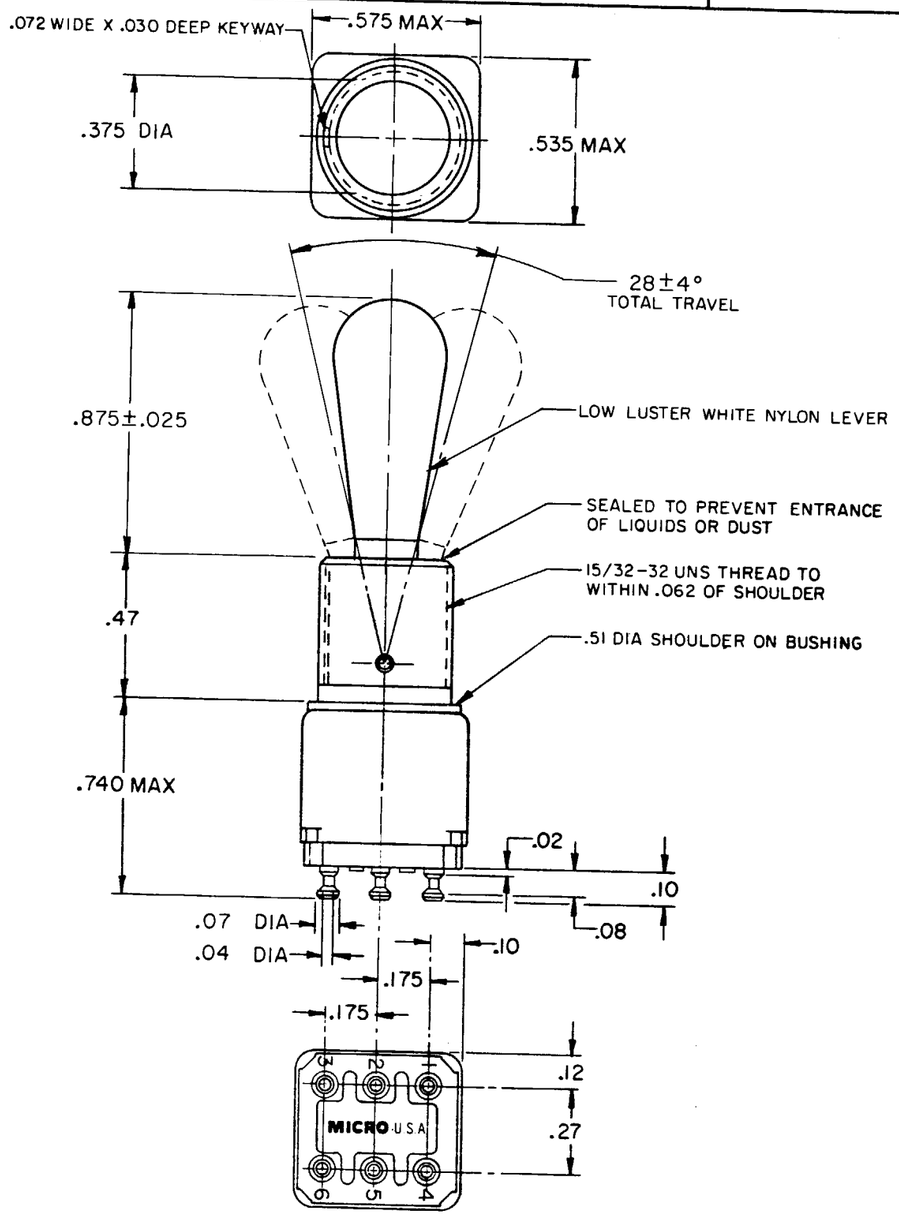

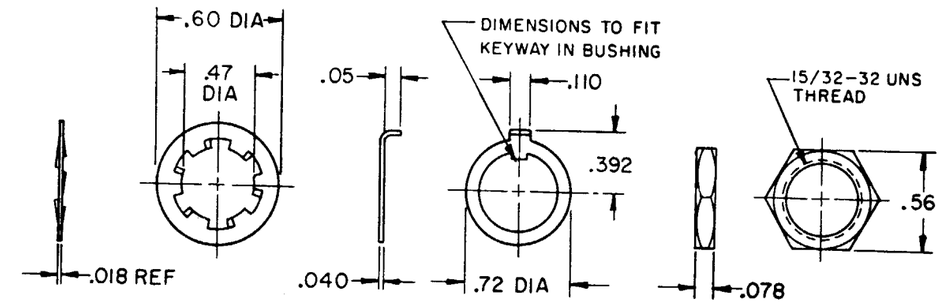

LOCKWASHER (PART NO. TS-10013) 1

LOCKING RING (PART NO. EN-12449) 1

HEX NUT (PART NO. TL-10632)(2) 3 1

CATALOG LISTING	ONE EXTREME POSITION (KEYWAY) 2-1 5-4	CENTER POSITION 2-1 4-5	OTHER EXTREME POSITION (OPPOSITE KEYWAY) 2-3, 5-6
12 TW48-1	ON	OFF	ON
12 TW48-3	ON	NONE	ON
12 TW48-5	MOM ON	OFF	ON
12 TW48-7	MOM ON	OFF	MOM ON
12 TW48-8	MOM ON	NONE	ON
12 TW48-21	NONE	OFF	ON
12 TW48-31	NONE	ON	ON

NOTE–
1 FURNISHED UNASSEMBLED
2 – TERMINALS ARE PLATED FOR SOLDERING
3 MATTE FINISH

CHARACTERISTICS	ELECTRICAL DATA
	CONTACT ARRANGEMENT
	CODE L117 5A-125 VAC

SCALE 2 TO 1
DO NOT SCALE PRINT
UNLESS OTHERWISE NOTED
DIMENSIONS ARE IN INCHES
TOLERANCES ARE:
ONE PLACE ±.01 ±.030
TWO PLACE ±.001 ±.015
THREE PLACE ±.0001 ±.005
ANGLES ±
WEIGHT .025 LB MAX

M 12 TW48 SERIES CHART 1
DRAWING NUMBER
RELEASE NO. PR-9009
REPLACES
ISSUE 14 15 16 18
CHECK

REVISIONS
A C015200
2 R E R FEB 77
B PR 9009
17 T S M JUNE 80
C C050565
12 CJH DEC 81
D C061233
26 TSK FEB 87
E C061252
13 JAP MAR 87
F C062939
24 TSK FEB 88

DRAWN R E R 2 FEB 77
CHECK
24 FEB 77