MICRO SWITCH
FREEPORT, ILLINOIS, U S A
A DIVISION OF HONEYWELL
FED. MFG. CODE 91929

SWITCH-TOGGLE

CATALOG LISTING
12TW59 SERIES
CHART 2

THIS DRAWING COVERS A PROPRIETARY ITEM AND IS THE PROPERTY OF MICRO SWITCH. A DIVISION OF HONEYWELL. THIS DRAWING IS NOT TO BE COPIED OR USED WITHOUT THE APPROVAL OF MICRO SWITCH.

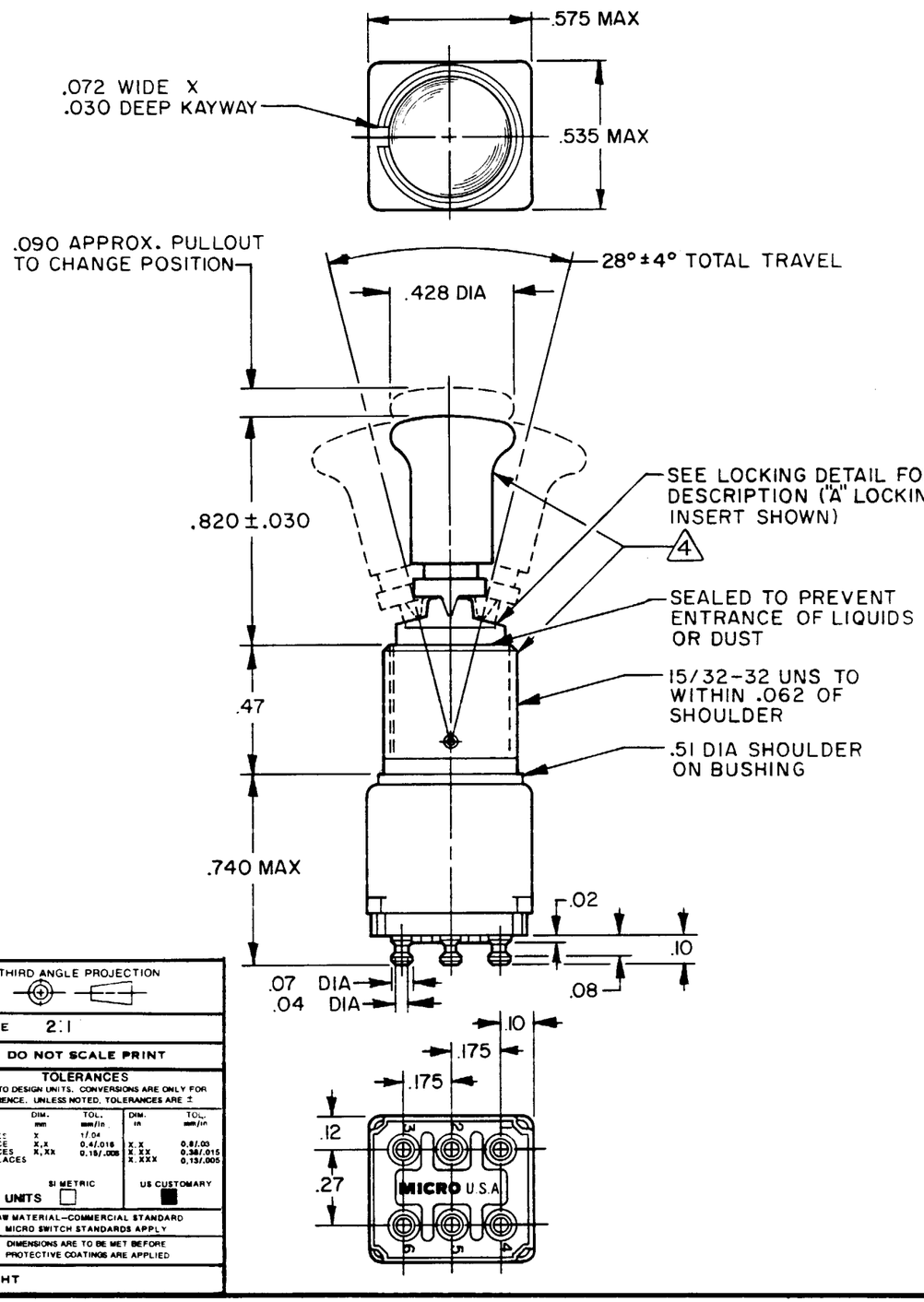

	CATALOG LISTING 2	AVAILABLE LOCKING COMBINATIONS FOR CONFIGURATION SEE LETTERED DETAILS	5 CIRCUIT MADE WITH TOGGLE LEVER IN: KEYWAY SIDE (1-2, 4-5)	CENTER (1-2, 4-5)	OPPOSITE KEYWAY (2-3, 5-6)
	12TW59-1	A,B,D,E,F,G,H,J,K,L,M,N,P	ON	OFF	ON
	12TW59-2	D, F, G	OFF	NONE	ON
	12TW59-3	D, F, G	ON	NONE	ON
	12TW59-21	E, F, K, M	NONE	OFF	ON
	12TW59-31	E, F, K, M	NONE	ON	ON
	12TW59-4	F	MOM OFF	NONE	ON
	12TW59-5	E, F, K, L, M, N	MOM ON	OFF	ON
	12TW59-6	F	MOM ON	NONE	OFF
	12TW59-7	E, L, N	MOM ON	OFF	MOM ON
	12TW59-8	F	MOM ON	NONE	ON
	12TW59-51	E	NONE	ON	MOM ON
	12TW59-61	E	MOM ON	OFF	NONE

ELECTRICAL DATA

CODE L117 5A-125 VAC

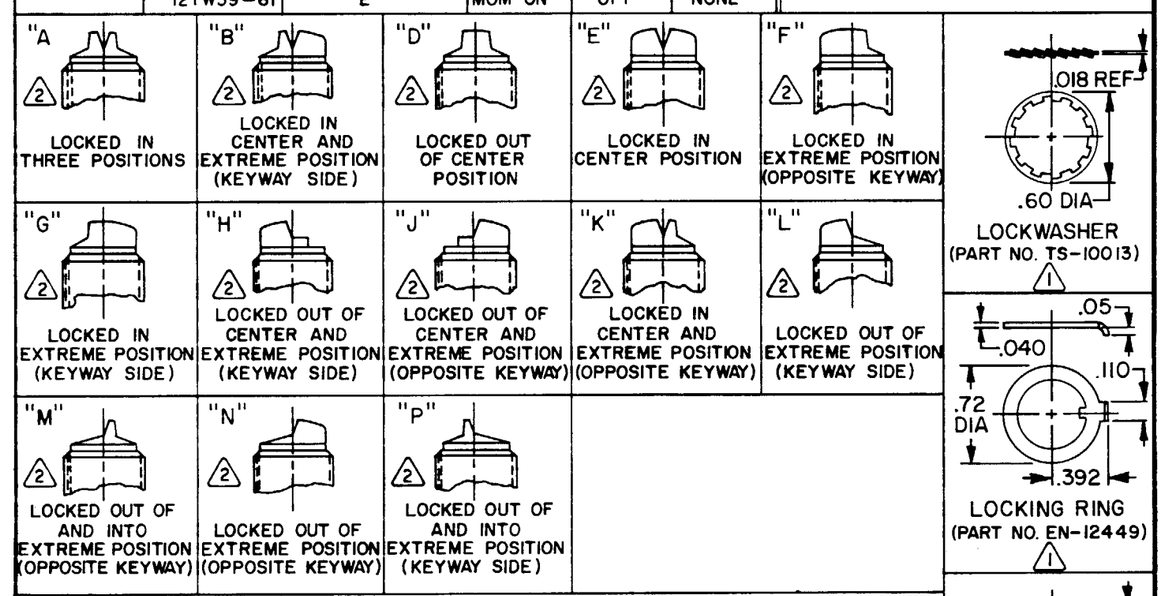

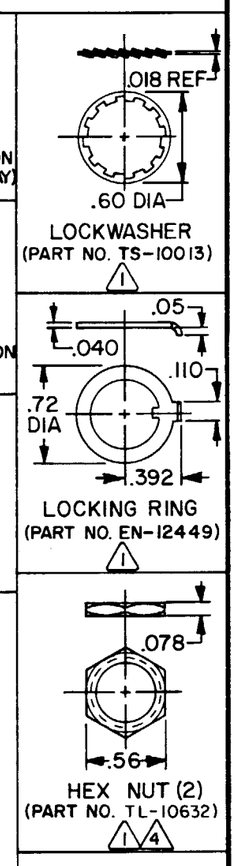

NOTES
1. FURNISHED UNASSEMBLED
2. SUFFIX MUST BE ADDED FOR DESIRED TYPE TOGGLE LOCKING SEE CHART FOR AVAILABLE LOCKING COMBINATIONS
3 - TERMINALS ARE PLATED FOR SOLDERING
4. MATTE FINISH
5. APPLIES ONLY TO "ON" AND "MOMENTARY ON" POSITIONS

THIRD ANGLE PROJECTION

SCALE 2:1

DO NOT SCALE PRINT

TOLERANCES
APPLY TO DESIGN UNITS. CONVERSIONS ARE ONLY FOR REFERENCE. UNLESS NOTED, TOLERANCES ARE ±

	DIM. mm	TOL. mm/in	DIM. in	TOL. mm/in
NO PLACES	X	1/.04		
ONE PLACE	X.X	0.4/.016	X.X	0.8/.03
TWO PLACES	X.XX	0.15/.006	X.XX	0.38/.015
THREE PLACES			X.XXX	0.13/.005
ANGLES				

DESIGN UNITS SI METRIC ☐ US CUSTOMARY ■

RAW MATERIAL—COMMERCIAL STANDARD
MICRO SWITCH STANDARDS APPLY

DIMENSIONS ARE TO BE MET BEFORE PROTECTIVE COATINGS ARE APPLIED

WEIGHT

12TW59 SERIES CHART 2 | M | DRAWING NUMBER | X8 | ISSUE 3 | RELEASE NO. PR-12058 | REPLACES

REVISIONS
A C062939 TSK 24 FEB 88
B C067673 SLB 5 JUL 90

DRAWN D J S 6 APR 83 | CHECK K J L 9 APR 83 | CHECK 7 APR 83 | SEC CHECK