MICRO SWITCH
FREEPORT ILLINOIS U S A
A DIVISION OF HONEYWELL
FED MFG CODE 81929

SWITCH-TOGGLE

CATALOG LISTING
12TW887
SERIES CHART 1

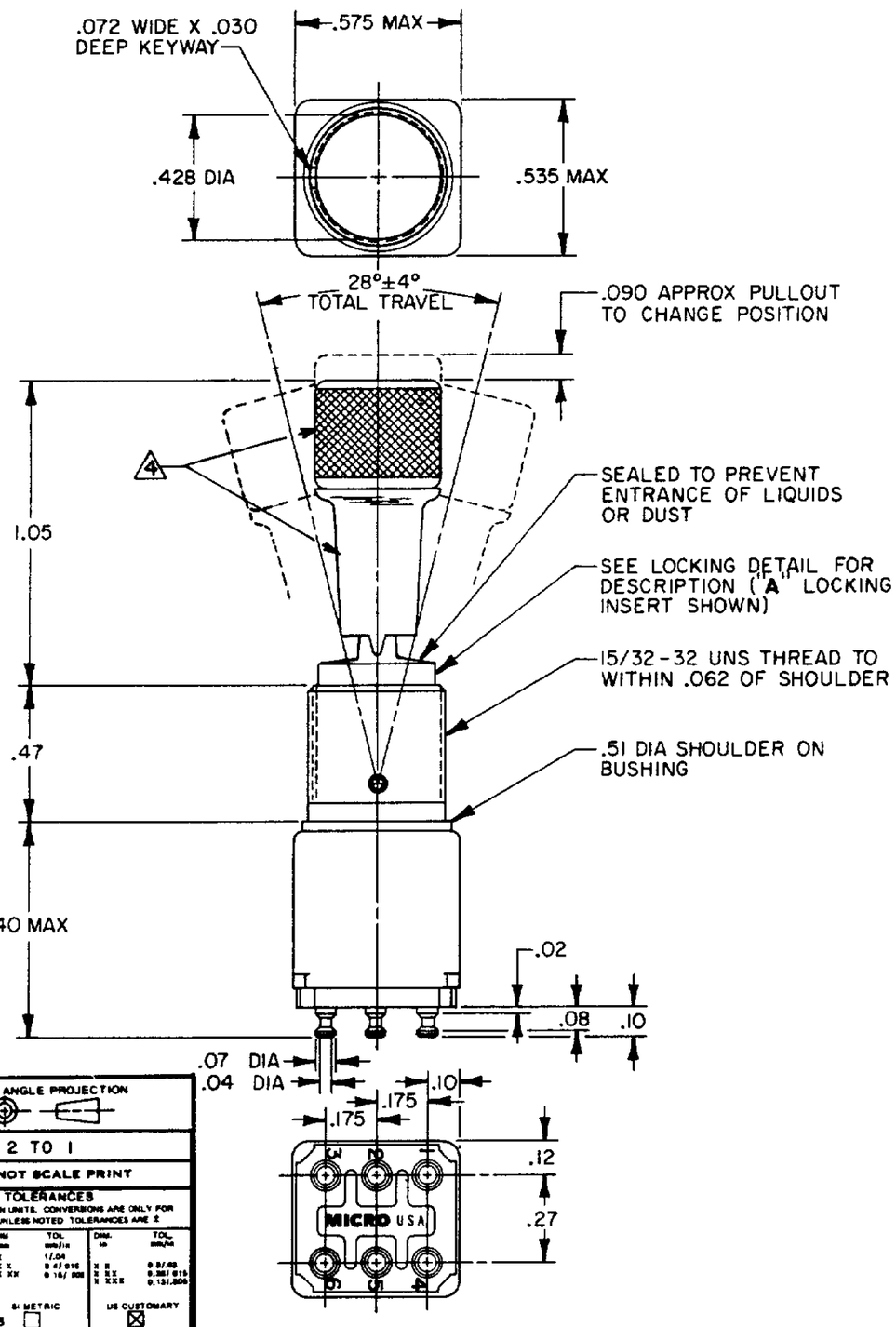

	CATALOG LISTING (2)	AVAILABLE LOCKING COMBINATIONS FOR CONFIGURATION SEE LETTERED DETAILS	CIRCUIT MADE WITH TOGGLE LEVER IN: KEYWAY SIDE (1-2, 4-5)	CENTER (1-2, 4-5)	OPPOSITE KEYWAY (2-3, 5-6)
	12TW887-1	A,B,D,E,F,G,H,J,K,L,M,N,P	ON	OFF	ON
	12TW887-2	D,F,G	OFF	NONE	ON
	12TW887-3	D,F,G	ON	NONE	ON
	12TW887-21	E,F,K,M	NONE	OFF	ON
	12TW887-31	E,F,K,M	NONE	ON	ON
	12TW887-4	F	MOM OFF	NONE	ON
	12TW887-5	E,F,K,L,M,N	MOM ON	OFF	ON
	12TW887-6	F	MOM ON	NONE	OFF
	12TW887-7	E,L,N	MOM ON	OFF	MOM ON
	12TW887-8	F	MOM ON	NONE	ON
	12TW887-41	F	NONE	MOM OFF	ON
	12TW887-51	E	NONE	ON	MOM ON
	12TW887-61	E	MOM ON	OFF	NONE

ELECTRICAL DATA
L117
5A-125 VAC

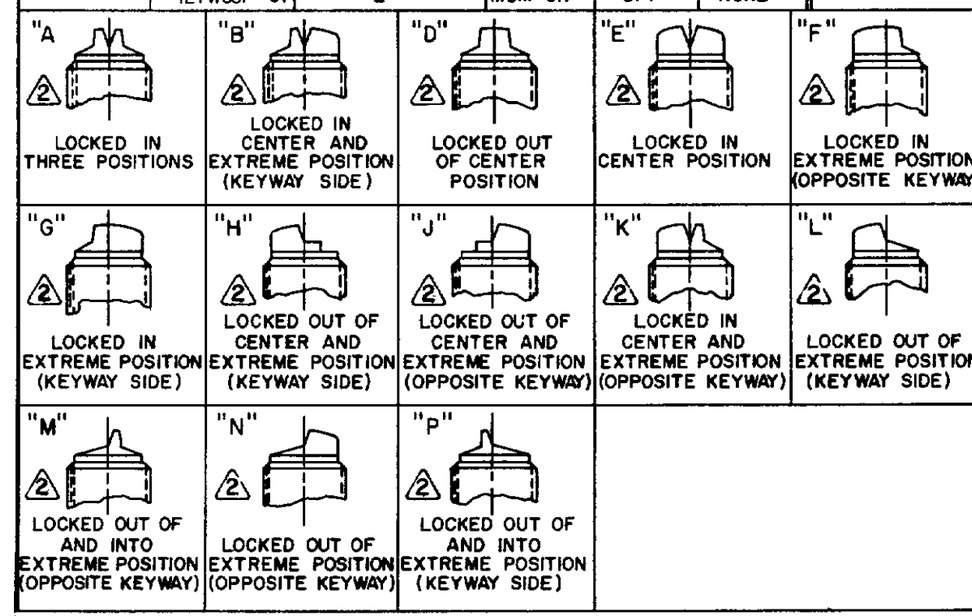

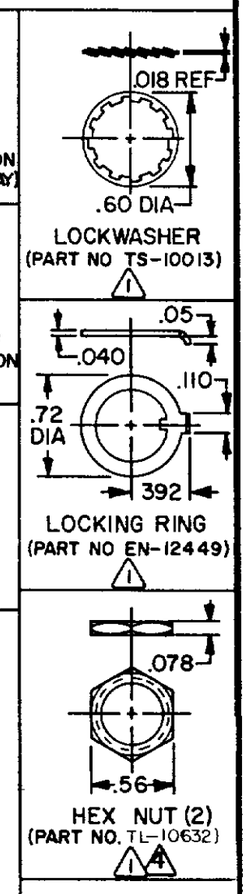

NOTES
1. FURNISHED UNASSEMBLED
2. SUFFIX MUST BE ADDED FOR DESIRED TYPE TOGGLE LOCKING
3 - TERMINALS ARE PLATED FOR SOLDERING
4. NICKEL PLATED MATTE FINISH
5 - GOLD PLATED CONTACTS

THIRD ANGLE PROJECTION
SCALE 2 TO 1
DO NOT SCALE PRINT
TOLERANCES
APPLY TO DESIGN UNITS. CONVERSIONS ARE ONLY FOR REFERENCE. UNLESS NOTED TOLERANCES ARE ±

	DIM mm	TOL mm/in	DIM in	TOL mm/in
NO PLACES	X	1/.04		
ONE PLACE	X.X	0.4/.016	X.X	0.3/.012
TWO PLACES	X.XX	0.16/.006	X.XX	0.381/.015
THREE PLACES			X.XXX	0.131/.005
ANGLES				

DESIGN UNITS: SI METRIC ☐ US CUSTOMARY ☒
WEIGHT .045 LB MAX

CATALOG LISTING
12TW887 SERIES CHART 1
PAGE 1 OF 1
REPLACES 12TW887 SERIES
RELEASE NO CO-78465
ISSUE 1
CHECK
REVISIONS
CHECK
CHECK KAG 23JUN94
CHECK
DRAWN DLT 10 JUN 94