THIS DRAWING IS UNPUBLISHED. RELEASED FOR PUBLICATION -,- .
© COPYRIGHT - BY TYCO ELECTRONICS CORPORATION. ALL RIGHTS RESERVED.

LOC	DIST
AJ	16

REVISIONS

P	LTR	DESCRIPTION	DATE	DWN	APVD
	0	RELEASED PER 0S14-0176-02.	-	JGH	JGH

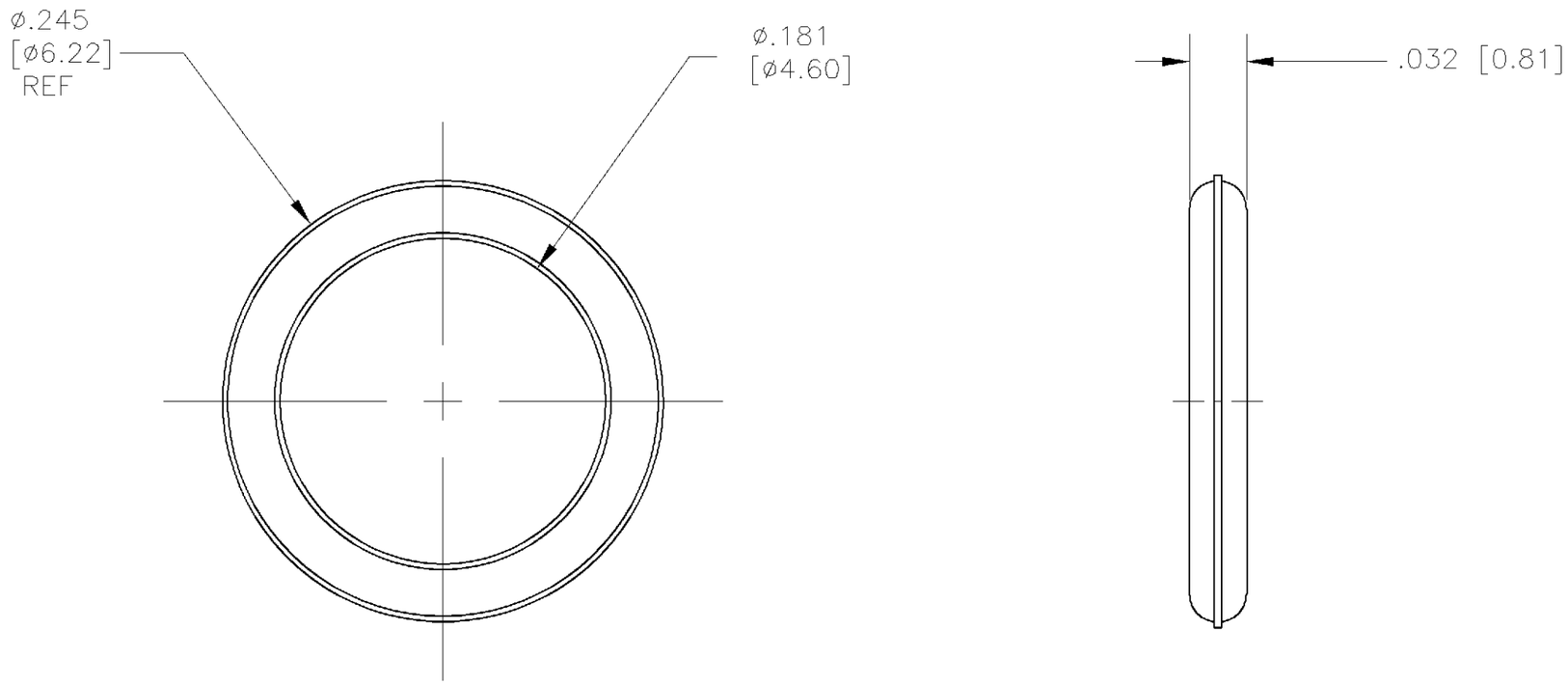

COLOR	MATERIAL	PART NUMBER
BLUE	FLOUROSILICONE PER MIL-R-25988, CLASS I, TYPE I	1405027-2
BLACK	BUNA N (NITRILE) PER MIL-P-25732	1405027-1

THIS DRAWING IS A CONTROLLED DOCUMENT.

DIMENSIONS: INCHES [mm]

TOLERANCES UNLESS OTHERWISE SPECIFIED:

0 PLC	± -
1 PLC	± -
2 PLC	± .005 [0.13]
3 PLC	± -
4 PLC	± -
ANGLES	± -

MATERIAL: SEE TABLE

FINISH: N/A

DWN	J. HAVENER	17APR2002
CHK	J. HAVENER	25APR02
APVD	J. HAVENER	25APR02

PRODUCT SPEC: N/A

APPLICATION SPEC: N/A

WEIGHT: -

CUSTOMER DRAWING

tyco Electronics

Tyco Electronics Corporation
Harrisburg, PA 17105-3608

NAME: GASKET, O-RING, OSP (4500-26) -

SIZE	CAGE CODE	DRAWING NO	RESTRICTED TO
A3	00779	C-1405027	-

SCALE 12:1 | SHEET 1 OF 1 | REV 0

AMP 1470-19 REV 31MAR2000

H:\ECs\dmmod\