Identification	Part No.	Drawing
Crimping tool for M12 Crimp and *har*-speed M12	**09 99 000 0501**	
Accessories M12 Crimp		
Locator	**09 99 000 0531**	
Single contacts (500 mating cycles)		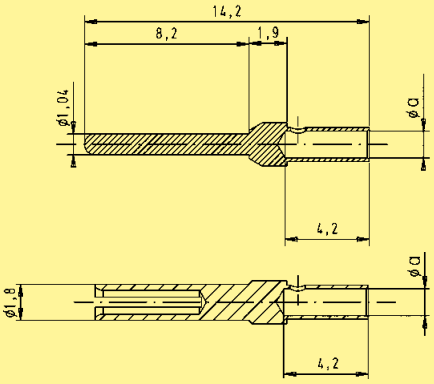
turned male contacts		
AWG 22-18 / 0.33-0.82 mm²	**09 67 000 3576**	
AWG 24-20 / 0.25-0.52 mm²	**09 67 000 8576**	
AWG 26-22 / 0.13-0.33 mm²	**09 67 000 5576**	
turned female contacts		
AWG 22-18 / 0.33-0.82 mm²	**09 67 000 3476**	
AWG 24-20 / 0.25-0.52 mm²	**09 67 000 8476**	
AWG 26-22 / 0.13-0.33 mm²	**09 67 000 5476**	
Accessories *har*-speed M12		
Locator	**09 99 000 0525**	
Single contacts (500 mating cycles)		
har-speed M12 contacts		
AWG 28-24 / 0.08-0.25 mm²	**21 01 100 9014**	
Accessories M12		
Locknut	**21 01 000 0018**	

	a
AWG 22-18	1.34
AWG 24-20	1.13
AWG 26-22	0.88

Stock items in bold type