MICRO SWITCH
FREEPORT, ILLINOIS, U.S.A.
A DIVISION OF HONEYWELL
FED. MFG. CODE 91929

SWITCH - PUSHBUTTON

CATALOG LISTING
15 PB1

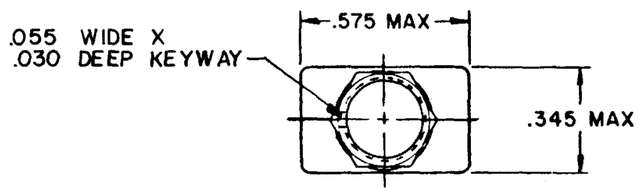

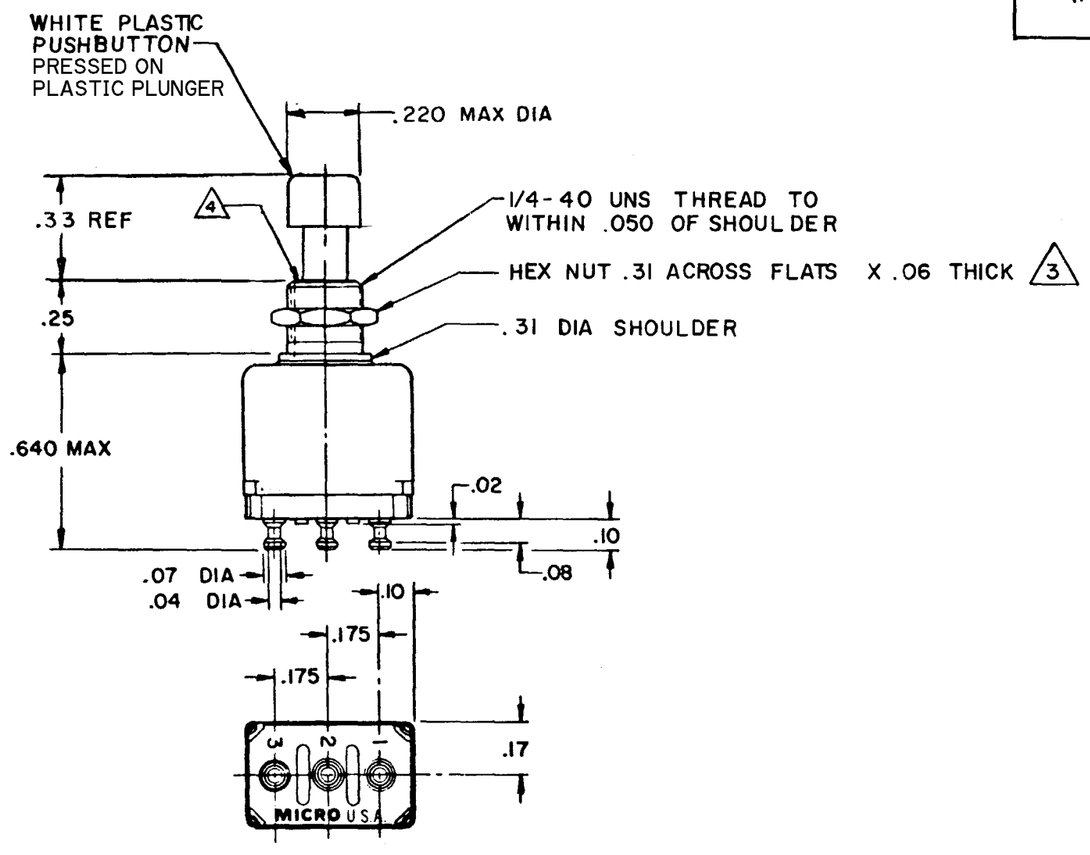

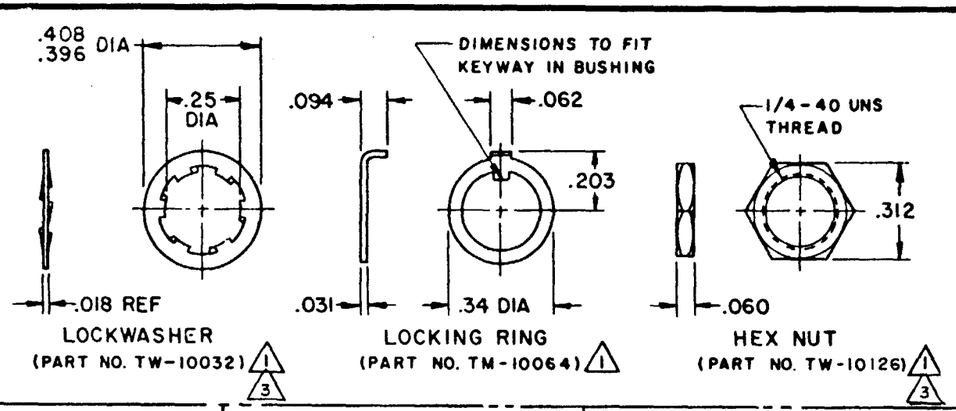

PLUNGER RELEASED	PLUNGER DEPRESSED
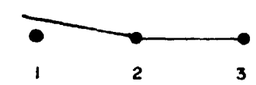	

NOTES
1. FURNISHED UNASSEMBLED
2. TERMINALS ARE PLATED FOR SOLDERING
3. MATTE NICKEL FINISH
4. BRIGHT NICKEL PLATE FINISH
5. RECOMMENDED FOR MANUAL OPERATION ONLY
6. DATE CODE, CAT. LISTING, & TERMINAL IDENT IS MARKED ON SIDE OF SWITCH

THIS DRAWING COVERS A PROPRIETARY ITEM AND IS THE PROPERTY OF MICRO SWITCH, A DIVISION OF HONEYWELL. THIS DRAWING IS NOT TO BE COPIED OR USED WITHOUT THE APPROVAL OF MICRO SWITCH.

THIRD ANGLE PROJECTION

SCALE 2 : 1

DO NOT SCALE PRINT

TOLERANCES
APPLY TO DESIGN UNITS. CONVERSIONS ARE ONLY FOR REFERENCE. UNLESS NOTED, TOLERANCES ARE ±

	DIM. mm	TOL. mm/in	DIM. in	TOL. mm/in
NO PLACES	X	1/.04		
ONE PLACE	X.X	0.4/.016	X.X	0.8/.03
TWO PLACES	X.XX	0.15/.006	X.XX	0.38/.015
THREE PLACES			X.XXX	0.13/.005
ANGLES				

DESIGN UNITS SI METRIC ☐ US CUSTOMARY ■

RAW MATERIAL - COMMERCIAL STANDARD
MICRO SWITCH STANDARDS APPLY

DIMENSIONS ARE TO BE MET BEFORE PROTECTIVE COATINGS ARE APPLIED

WEIGHT .014 LB MAX

CHARACTERISTICS

OPERATING FORCE ------- 12 OZ APPROX
TOTAL TRAVEL ---------- .150 APPROX

ELECTRICAL DATA

CONTACT ARRANGEMENT
S P D T MOMENTARY

115 VAC OR 30 VDC
RESISTIVE ---------- 5 AMP
INDUCTIVE ---------- 2 AMP
LAMP ---------- 1 AMP

AT 65,000 FT ALTITUDE

CODE L117 5A-125 VAC

REVISIONS			
A	C047480	G J W 24 MAR 80	
B	C059236	J A P 27 MAR 86	
C	C060532	TSK 18 NOV 86	
D	C061252	J A P 12 MAR 87	
E	C062939	TSK 24 FEB 88	
F	C067868	SAV 9 JUL 90	
G	C083294	DLT 16 APR 97	

REPLACES	PR-396	
RELEASE NO.	M	27 MAR 80
DRAWING NUMBER	15 PB1	
ISSUE	14	
CHECK		C E B
DRAWN	G J W	24 MAR 80

FORMTEK FO-52851-A