used for: D-SUB

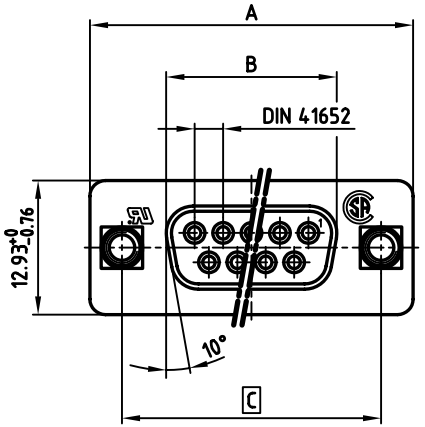

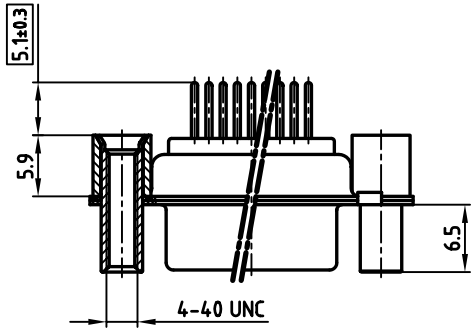

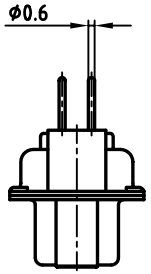

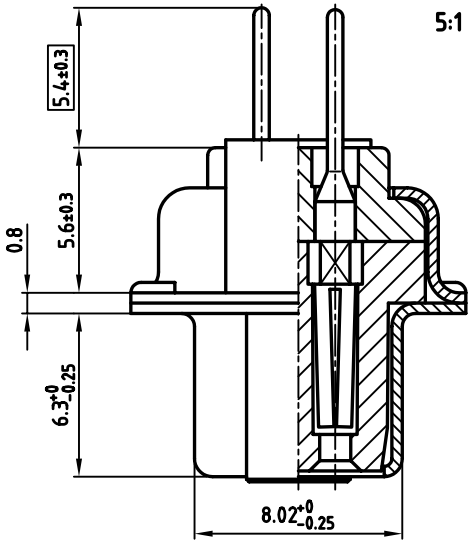

NOTES:

1. METALSHELLS: STEEL; min. 320µ" TIN
2. INSULATORS: PBT GF UL 94 V-0, BLACK
3. CONTACTS: COPPER ALLOY
4. PLATING: min. 8µ" HARD GOLD OVER min. 50µ" NICKEL
5. THREADED REAR SPACER AND FRONT THREADED LOCK: COPPER ALLOY; min. 200µ" TIN over 80µ" NICKEL
6. COLLAR: COPPER ALLOY; min. 200µ" TIN over 80µ" NICKEL
7. P.C.B. HOLE DRILLINGS ON DRAWING NO.: 16K1IIUA
8. MAXIMUM TORQUE VALUE FOR THREAD: 6" LBS
9. [ ] = CRITICAL DIMENSION: SPC

Directive 2002/95/EC „RoHS" Compliant

POS.	A -0.76	B +0.25	C	PART-NO.
9	31.19	16.46	25.00 +0.12 -0.13	164A12129X
15	39.52	24.79	33.30 +0.15 -0.1	164A12139X
25	53.42	38.50	47.04 ±0.13	164A12149X
37	69.70	54.96	63.50 ±0.13	164A12159X

THIS DRAWING MAY NOT BE COPIED OR REPRODUCED IN ANY WAY, AND MAY NOT BE PASSED ON TO A THIRD PARTY WITHOUT WRITTEN PERMISSION. OWNERSHIP AND COPYRIGHT OF CONEC GmbH

DO NOT ALTER CAD DRAWING BY HAND

rev.	description	date	name

tolerance

2001	date	name
drawn	16.08.	Parei
appd.	16.08.	E. Mickenbecker
norm	DIN 41652	
d-old		

CONEC®

scale: 2:1
material: SEE NOTES

title:
D-SUB FEMALE
9-37pos. SOLDER PIN STRAIGHT
threaded rear spacer and front threaded lock

dwg no: 16K1A270A
AutoCAD 2000 | DIN-A 3 | sh: 1/1

part no: SEE TABLE