used for: D-SUB HD

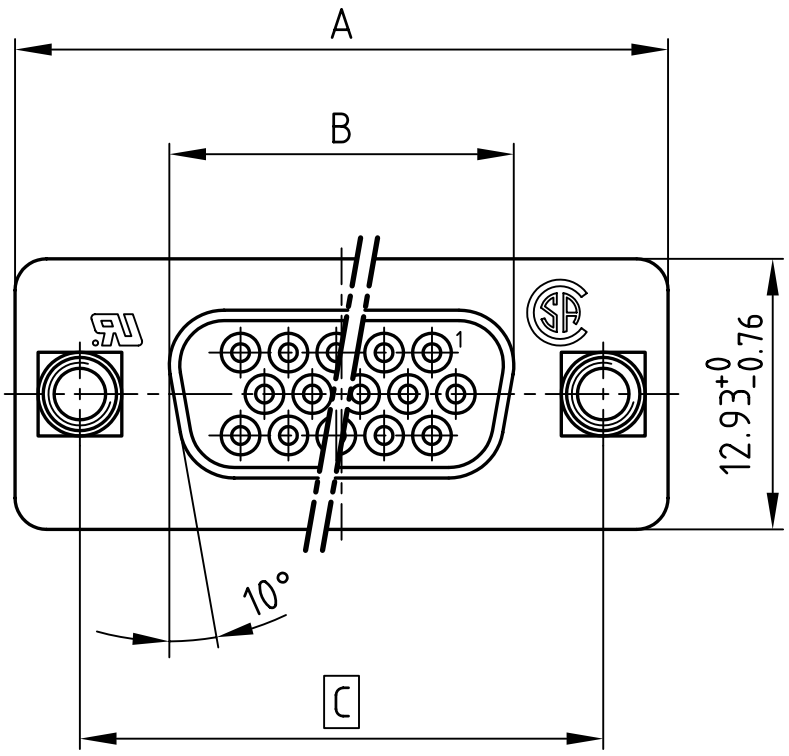

POS.	A -0.76	B -0.25	C	Part NO.
15	31.19	16.46	25.00 +0.12 -0.13	164A17459X
26	39.52	24.79	33.30 +0.15 -0.1	164A17469X
44	53.42	38.50	47.04 ±0.13	164A17479X
62	69.70	54.96	63.50 ±0.13	164A17489X

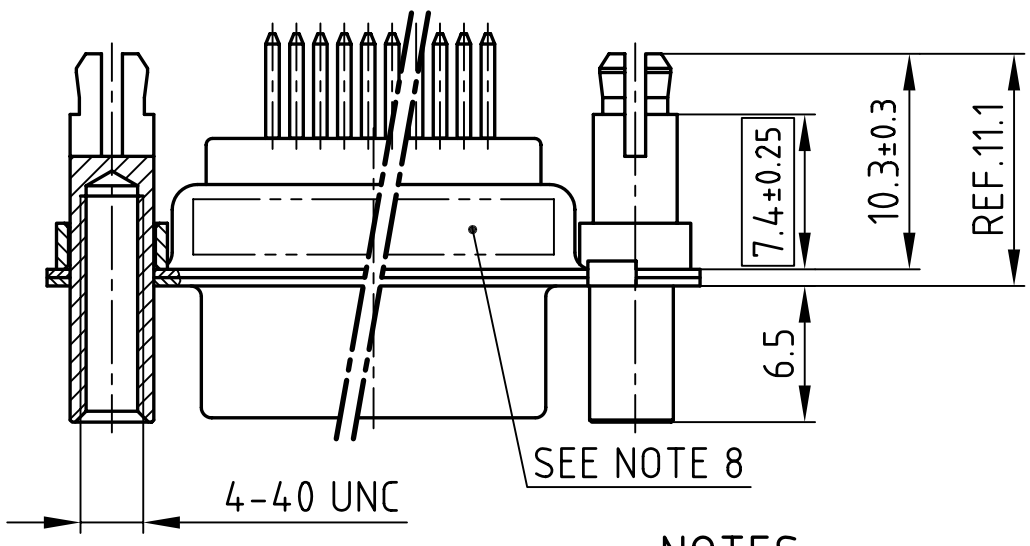

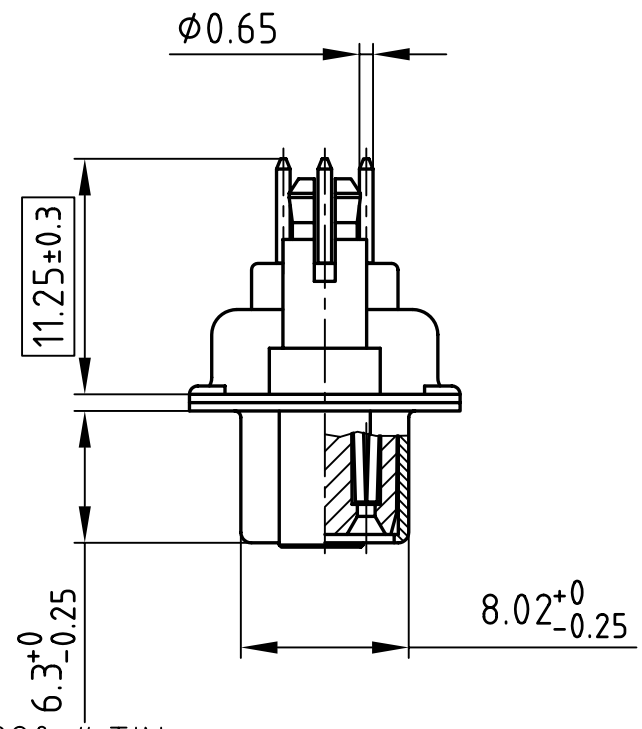

NOTES:

1. METALSHELLS: STEEL; min. 320µ" TIN
2. INSULATORS: PBT GF UL 94 V-0, BLACK
3. CONTACTS: COPPER ALLOY
   PLATING: min. 8µ" HARD GOLD OVER min. 50µ" NICKEL
4. THREADED LOCK: COPPER ALLOY; min. 200µ" TIN over 80µ" NICKEL
   PCB-HOLE: Ø3.1±0.1; PCB THICKNESS 1.6mm
5. COLLAR: COPPER ALLOY; min. 200µ" TIN over 80µ" NICKEL
6. P.C.B. HOLE DRILLINGS SEE SHEET 2
7. MAXIMUM TORQUE VALUE FOR THREAD: 6" LBS
8. CONNECTOR IS PART MARKED: PART-NO. CONEC ABC
9. [ ] = CRITICAL DIMENSION

APPROVAL # FREIGABE # DEBLOCAGE # AUTOR/ZACION # APPROVAL

CUSTOMER APPROVAL DATE:

NAME: TITLE:

COMPANY NAME:

THIS DRAWING MAY NOT BE COPIED OR REPRODUCED IN ANY WAY, AND MAY NOT BE PASSED ON TO A THIRD PARTY WITHOUT WRITTEN PERMISSION. OWNERSHIP AND COPYRIGHT OF CONEC GmbH

DO NOT ALTER CAD DRAWING BY HAND

rev.	description	date	name

tolerance

	date	name
2002		
drawn	06.09,	Parei
appd.	06.09.	Mickenbecker
norm	DIN 41652	
d-old		

scale: 2:1

material: SEE NOTES

title:

D-SUB HD FEMALE

15-62pos. SOLDER PIN STRAIGHT
with threaded lock and spacer clip

dwg no: 16K2A437A

AutoCAD 2000

DIN-A 4

sh:1/2

part no: SEE TABLE

used for: D-SUB HD

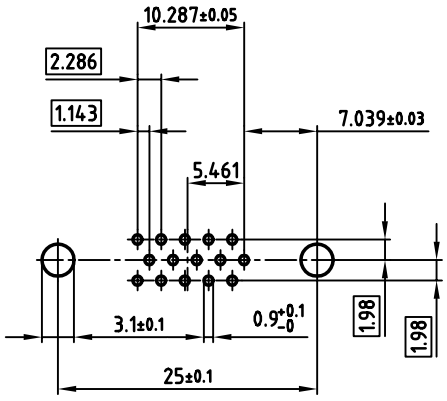

15pos.

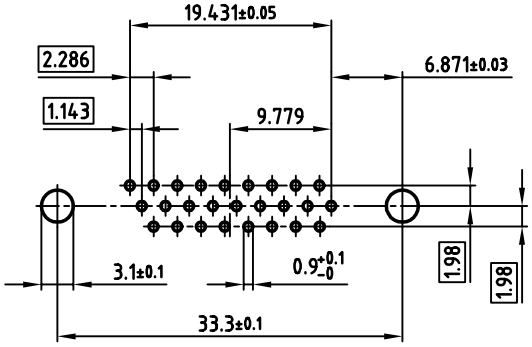

26pos.

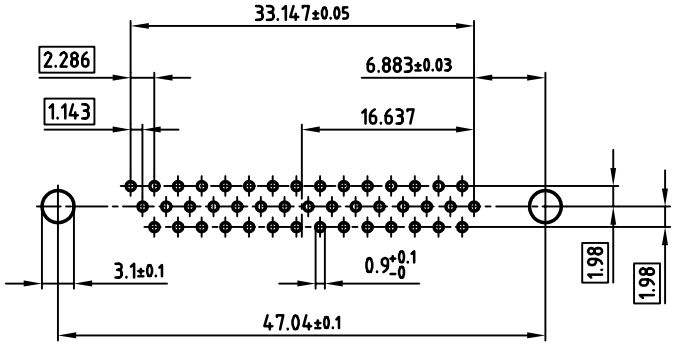

44pos.

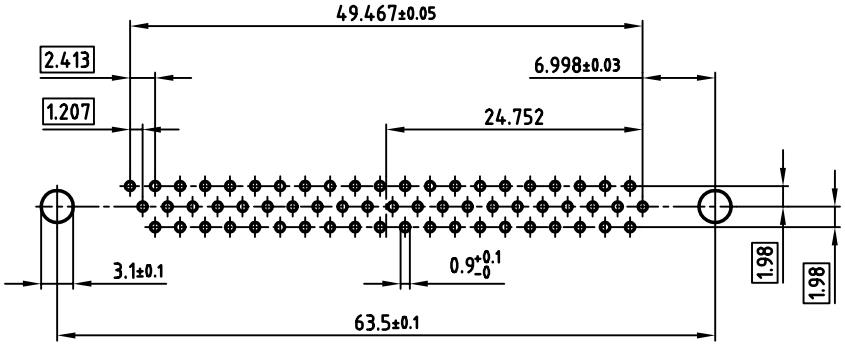

62pos.

APPROVAL # FREIGABE # DEBLOCAGE # AUTOR/ZACION # APPROVAL

CUSTOMER APPROVAL DATE:

NAME: TITLE:

COMPANY NAME:

APPROVAL # FREIGABE # DEBLOCAGE # AUTOR/ZACION # APPROVAL

THIS DRAWING MAY NOT BE COPIED OR REPRODUCED IN ANY WAY, AND MAY NOT BE PASSED ON TO A THIRD PARTY WITHOUT WRITTEN PERMISSION. OWNERSHIP AND COPYRIGHT OF CONEC GmbH

DO NOT ALTER CAD DRAWING BY HAND

rev.	description	date	name

tolerance

2002	date	name
drawn	09.09.	Parei
appd.	09.09.	Mickenbecker
norm	DIN 41652	
d-old		

CONEC®

scale: 2:1

material: SEE SHEET 1

title:

P.C.B. HOLE DRILLINGS

D-SUB HD FEMALE 15-62pos. SOLDER PIN with threaded lock and spacer clip

dwg no: AutoCAD 2000 DIN-A 3

16K2A437A sh:2/2

part no: SEE SHEET 1