used for: D-SUB

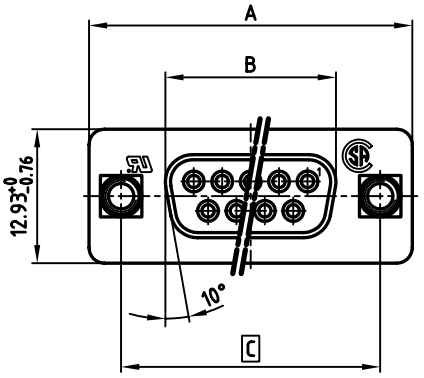

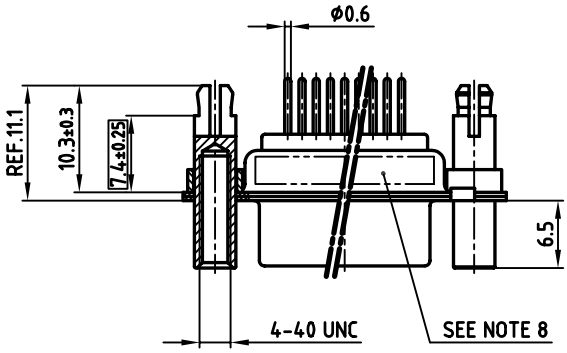

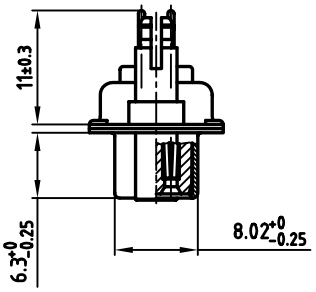

POS.	A -0.76	B -0.25	C	Part No.
9	31.19	16.46	25.00 +0.12 -0.13	**164A16669X**
15	39.52	24.79	33.30 +0.15 -0.1	**164A16679X**
25	53.42	38.50	47.04 ±0.13	**164A16689X**
37	69.70	54.96	63.50 ±0.13	**164A16699X**

NOTES:

1. METALSHELLS: STEEL; min. 320µ" TIN
2. INSULATORS: PBT GF UL 94 V-0, BLACK
3. CONTACTS: COPPER ALLOY
   PLATING: min. 8µ" HARD GOLD OVER min. 50µ" NICKEL
4. THREADED LOCK / SPACER CLIP: COPPER ALLOY; min. 200µ" TIN over 80µ" NICKEL
   PCB-HOLE: Φ3.1±0.1; PCB THICKNESS 1.6mm
5. COLLAR: COPPER ALLOY; min. 200µ" TIN over 80µ" NICKEL
6. P.C.B. HOLE DRILLINGS ON DRAWING NO.: 16K1IIUA
7. MAXIMUM TORQUE VALUE FOR THREAD: 6" LBS
8. CONNECTOR IS PART MARKED: PART-NO. CONEC Y/WW
9. [ ] = CRITICAL DIMENSION

Directive 2002/95/EC „RoHS" Compliant

APPROVAL # FREIGABE # DEBLOCAGE # AUTOR/ZACION # APPROVAL

CUSTOMER APPROVAL DATE:

NAME: TITLE:

COMPANY NAME:

APPROVAL # FREIGABE # DEBLOCAGE # AUTOR/ZACION # APPROVAL

THIS DRAWING MAY NOT BE COPIED OR REPRODUCED IN ANY WAY, AND MAY NOT BE PASSED ON TO A THIRD PARTY WITHOUT WRITTEN PERMISSION. OWNERSHIP AND COPYRIGHT OF CONEC GmbH

DO NOT ALTER CAD DRAWING BY HAND

rev.	description	date	name

tolerance

dim. in mm

2002	date	name
drawn	06.11.	Parei
appd.	06.11.	Kühle
norm	DIN 41652	
d-old		

CONEC®

scale: 2:1

material: SEE NOTES

title:

D-SUB FEMALE

9-37pos. SOLDER PIN STRAIGHT
with threaded lock and spacer clip

dwg no: AutoCAD 2000 DIN-A 3

16K2IKWA

sh: 1/1

part no: SEE TABLE