MICRO SWITCH
a Honeywell Division
FED. MFG. CODE 91929

SWITCH – BASIC

CATALOG LISTING
1DM335

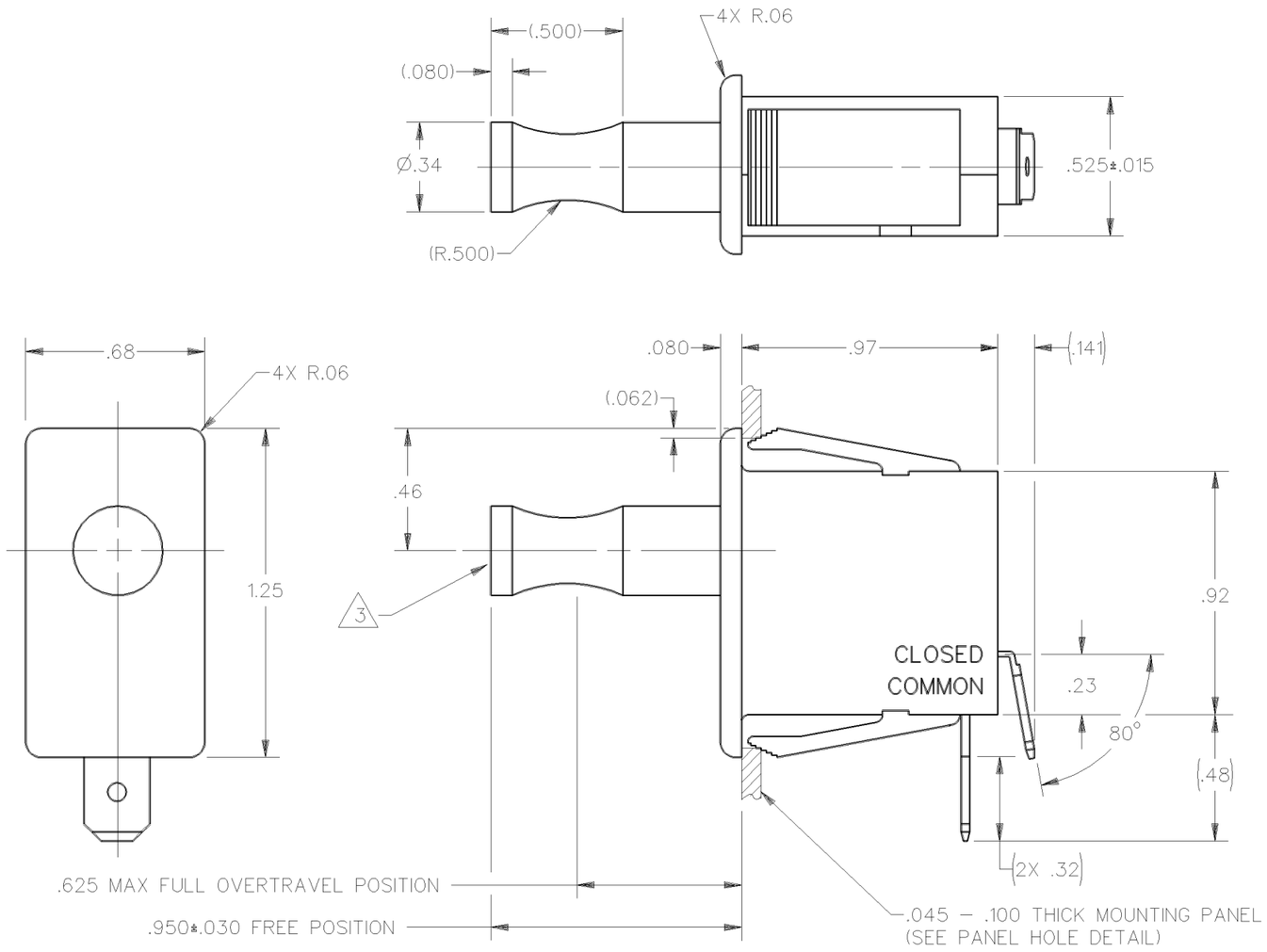

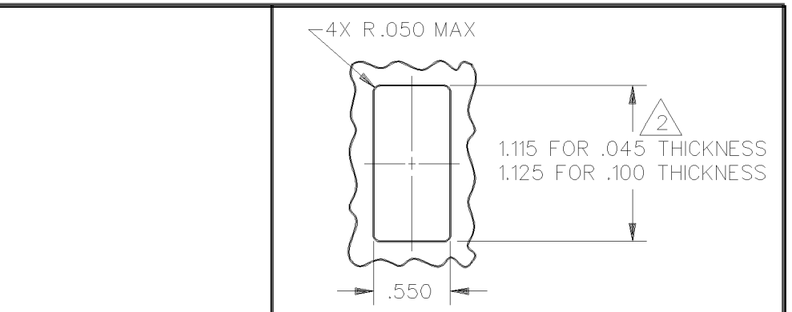

PANEL HOLE DETAIL
SCALE FULL

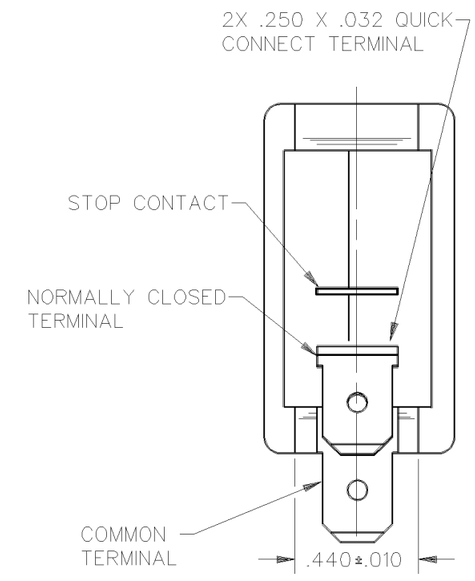

NOTE
1 – WHITE PLASTIC CASE AND BLACK PLASTIC PLUNGER
2 NOMINAL CUTOUT DIMENSION FOR PANELS BETWEEN .045 AND .100 SHOULD BE INTERPOLATED BETWEEN 1.115 AND 1.125
3 PULL TO OPERATE – MAINTAINED, PUSH TO BREAK CIRCUIT

THIS DRAWING COVERS A PROPRIETARY ITEM AND IS THE PROPERTY OF MICRO SWITCH. A DIVISION OF HONEYWELL. THIS DRAWING IS NOT TO BE COPIED OR USED WITHOUT THE APPROVAL OF MICRO SWITCH

THIRD ANGLE PROJECTION

SCALE 2 TO 1

DO NOT SCALE PRINT

CHARACTERISTICS

OPERATING FORCE – – – – – 15 OZ MAX

ELECTRICAL DATA

CONTACT ARRANGEMENT
S P N C

L181
10A 1/2HP 125, 250 OR 277 VAC

UNLESS OTHERWISE SPECIFIED TOLERANCES ARE

ONE PLACE	(.0)	±.030
TWO PLACE	(.00)	±.015
THREE PLACE	(.000)	±.005
ANGLES		± 5°

WEIGHT

ANSI Y14.5M–1982 APPLIES

CATALOG LISTING 1DM335
ISSUE 5
REVISIONS
A CO-72328 DHD 20 JUL 92
B CO-78187 K D R 6 SEP 94
RELEASE NO. PR-16753
REPLACES X88621-DM
DRAWN DHD 20 JUL 92
CHECK W J C 26 JAN 93
CHECK
DDM/CAD