MICRO SWITCH
FREEPORT, ILLINOIS, U.S.A.
A DIVISION OF HONEYWELL
FED. MFG. CODE 91929

SWITCH-ENCLOSED

CATALOG LISTING
1EN42-R

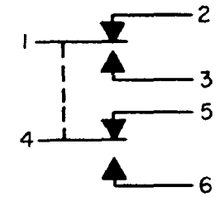

CIRCUIT DIAGRAM

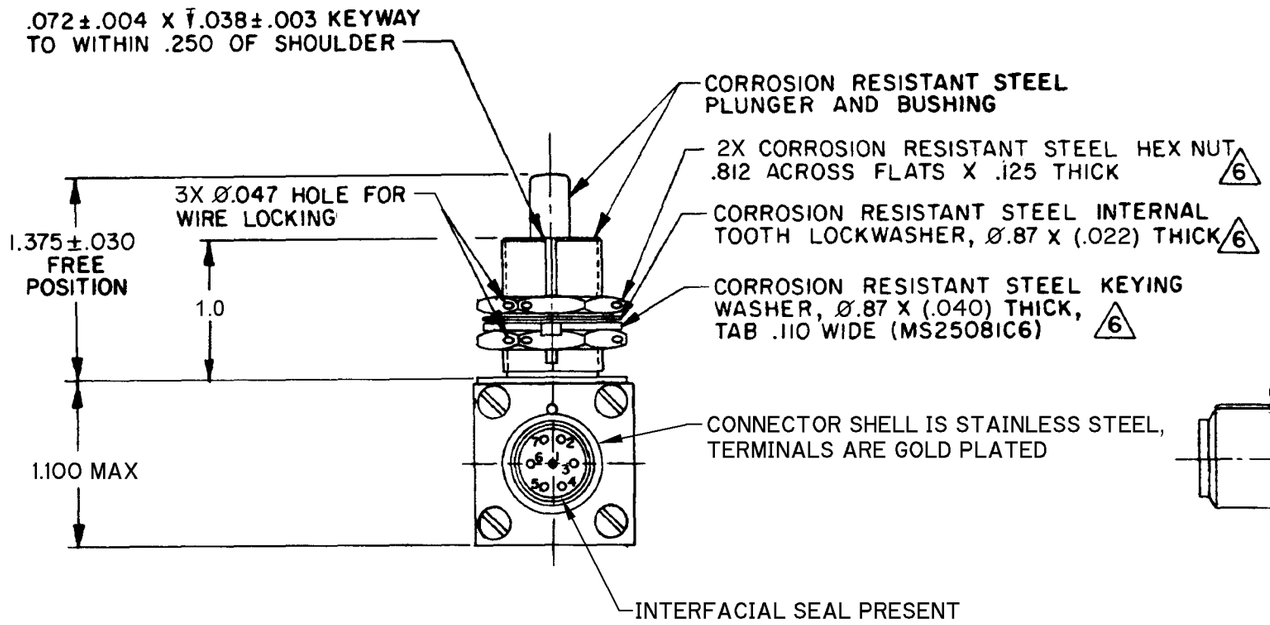

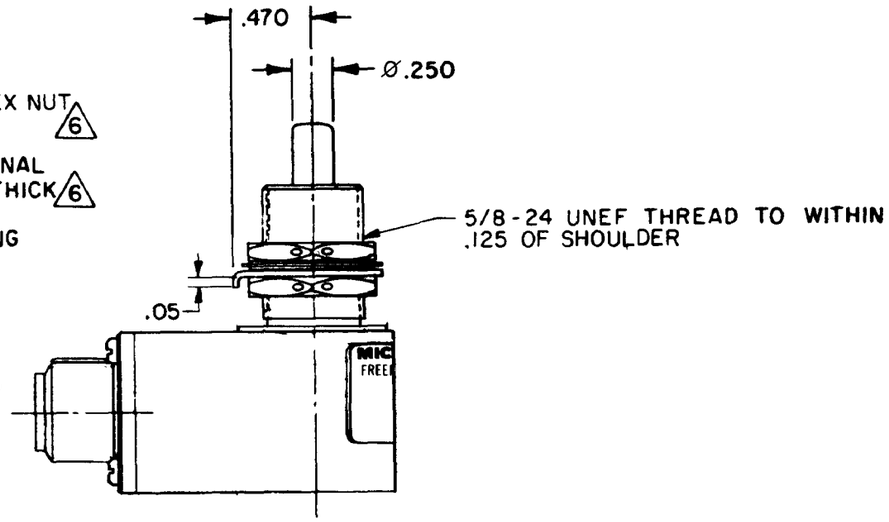

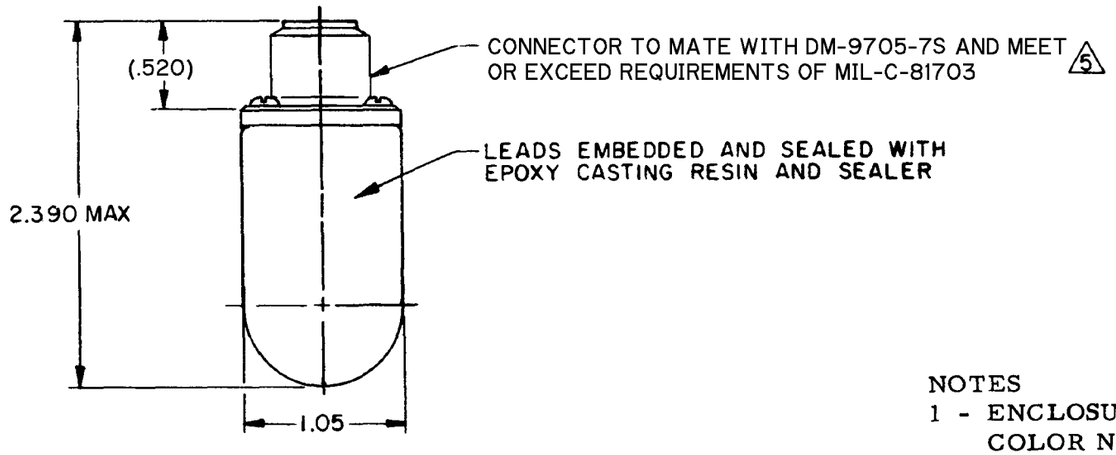

NOTES
1 - ENCLOSURE FINISHED WITH GREEN EPOXY BASED ENAMEL COLOR NO. 34151 PER FEDERAL STANDARD 595
2 - SWITCH SEALED PER MIL - PRF - 8805 SYMBOL 4
3 - CIRCUIT DIAGRAM AND CATALOG LISTING ARE SHOWN ON NAMEPLATE
4 - COINCIDENCE OF OPERATING AND RELEASING POINTS: .010 OF PLUNGER TRAVEL
5 MATING CONNECTOR CAN BE PURCHASED AS A SEPARATE PART DM-9705-7S FROM DEUTSCH
6 - HARDWARE MAY BE PACKAGED UNASSEMBLED PER MIL-PRF-8805

THIS DRAWING COVERS A PROPRIETARY ITEM AND IS THE PROPERTY OF MICRO SWITCH, A DIVISION OF MINNEAPOLIS-HONEYWELL REGULATOR CO. THIS DRAWING IS NOT TO BE COPIED OR USED WITHOUT THE APPROVAL OF MICRO SWITCH.

CHARACTERISTICS

OPERATING FORCE	6-12 LB
FULL OVERTRAVEL FORCE	30 LB MAX
RELEASE FORCE	4 LB MIN
PRETRAVEL	.040 MAX
DIFFERENTIAL TRAVEL	.020 MAX
OVERTRAVEL	.250 MIN

ELECTRICAL DATA

CONTACT ARRANGEMENT 2X S P D T

LOAD	28 VDC SEA LEVEL	28 VDC 50,000 FT.
RES	4	4
IND	2	2
MOTOR	4	
LAMP		

SCALE NONE
DO NOT SCALE PRINT

UNLESS OTHERWISE NOTED
DIMENSIONS ARE IN INCHES
TOLERANCES ARE:

ONE PLACE	(.0)	±.030
TWO PLACE	(.00)	±.015
THREE PLACE	(.000)	±.005
ANGLES		± -

WEIGHT 5.6 OZ MAX

ANSI Y14.5M-1982 APPLIES

CATALOG LISTING 1EN42-R
PAGE 1 OF 1
ISSUE M 23
RELEASE NO. SR-6699
REPLACES
CHECK
27 JAN 09
CMH
CHECK
25 JAN 79
DJW
CHECK
16 JAN 79
CEB
DRAWN
RASTER

REVISIONS

A	44351 PART 5	CEB 16 JAN 79
B	C047573	JAP 5 AUG 80
C	C047968	JAP 29 OCT 80
D	C055541	JAP 6 AUG 84
E	C059459	WJK 27 AUG 86
F	C082747	GJW 1 JUN 96
G	C080689	JAS 24 JUN 98
H	0047679	KNR 27 JAN 09