MICRO SWITCH
A DIVISION OF MINNEAPOLIS-HONEYWELL REGULATOR COMPANY
FREEPORT, ILLINOIS

SWITCH – ENCLOSED

CATALOG LISTING
1HE1-6B

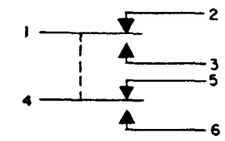

CIRCUIT DIAGRAM

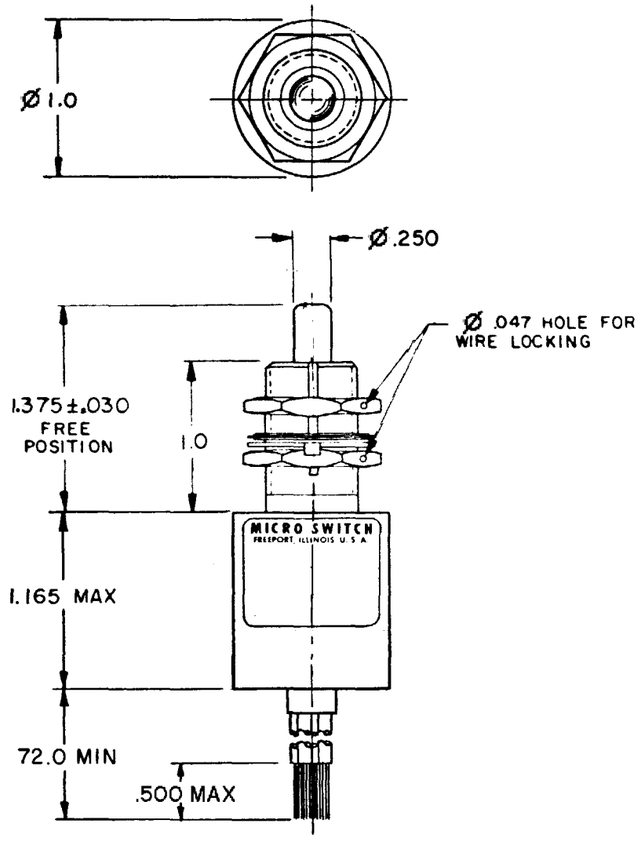

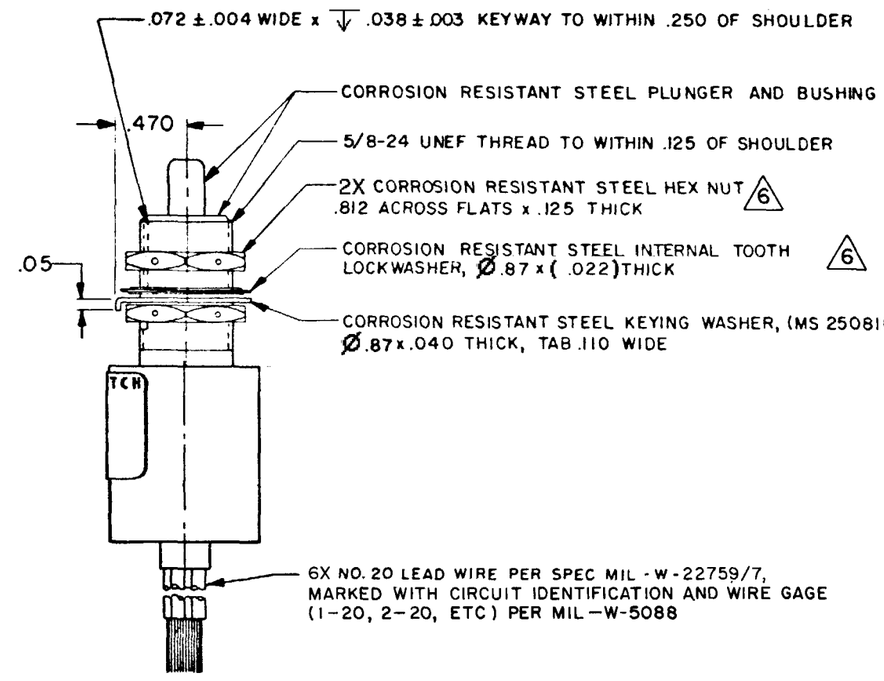

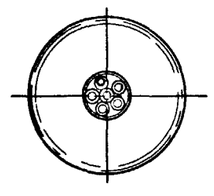

ANSI Y14.5M-1982 APPLIES

NOTES

1 - CORROSION RESISTANT STEEL ENCLOSURE
2 - SWITCH SEALED PER MIL-S-8805 SYMBOL 5
3 - COINCIDENCE OF OPERATING AND RELEASING POINTS: .010 INCH OF PLUNGER TRAVEL
4 - CIRCUIT DIAGRAM, CATALOG LISTING, DATE CODE, FED. MFG. CODE ARE SHOWN ON NAMEPLATE
5 - FOR OPERATION IN TEMPERATURES OF -65°F TO +257°F
6 - HARDWARE MAY BE PACKAGED UNASSEMBLED PER MIL-S-8805

THIS DRAWING COVERS A PROPRIETARY ITEM AND IS THE PROPERTY OF MICRO SWITCH, A DIVISION OF MINNEAPOLIS-HONEYWELL REGULATOR CO. THIS DRAWING IS NOT TO BE COPIED OR USED WITHOUT THE APPROVAL OF MICRO SWITCH.

CHARACTERISTICS

OPERATING FORCE	6–12 LB
FULL OVERTRAVEL FORCE	30 LB MAX
RELEASE FORCE	4 LB MIN
PRETRAVEL	.040 MAX
DIFFERENTIAL TRAVEL	.020 MAX
OVERTRAVEL	.250 MIN

ELECTRICAL DATA

CONTACT ARRANGEMENT
2X S P D T

LOAD	28 VDC SEA LEVEL	28 VDC 100,000 FT.
RES	5	5
IND	3	3
MOTOR	4	4

SCALE FULL
DO NOT SCALE PRINT

UNLESS OTHERWISE SPECIFIED
DIMENSIONS ARE IN INCHES
TOLERANCES ARE:
ONE PLACE (.0) ±.030
TWO PLACE (.00) ±.015
THREE PLACE (.000) ±.005
ANGLES ±1°

WEIGHT 7.5 OZ. MAX.

1HE1-6B
PAGE 1 OF 1
M
DRAWING NUMBER
ISSUE 5
REPLACES
RELEASE NO. PR-5480
CHECK
REVISIONS
A C044351 SJB 28 NOV 78
A C044646 JAP 5 DEC 78
C C047573 TSM 17 JULY 80
D CO-68503 SAV 20 OCT 90
E CO-94005 PPF 14 DEC 98
14 DEC 98 JAF
CHECK
20 JAN 76
LSO
CHECK
76 JAN 19
DRAWN
J A L
FORMTEK
FO-50375-003