MICRO SWITCH
FREEPORT, ILLINOIS, U.S.A.
A DIVISION OF HONEYWELL
FED. MFG. CODE 81929

SWITCH - ENCLOSED

CATALOG LISTING
1LS1-R

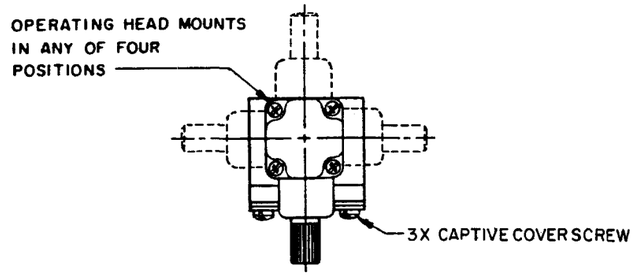

CIRCUIT DIAGRAM

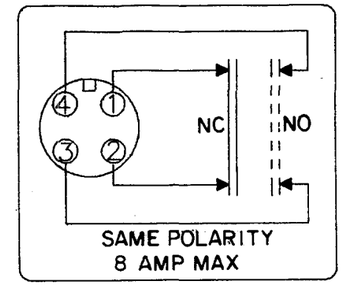

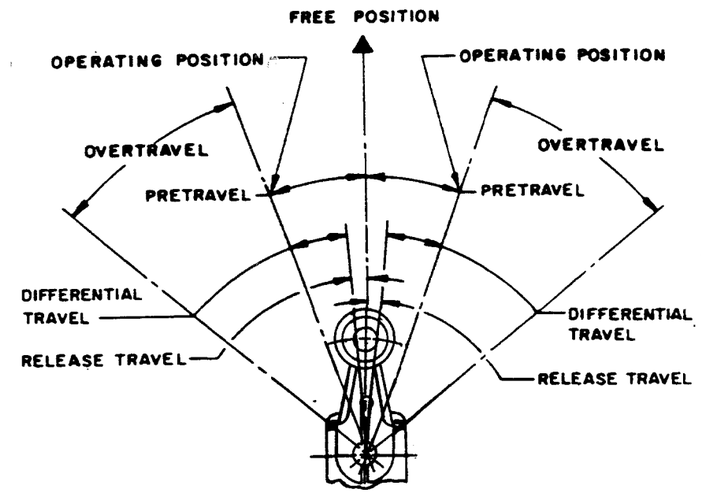

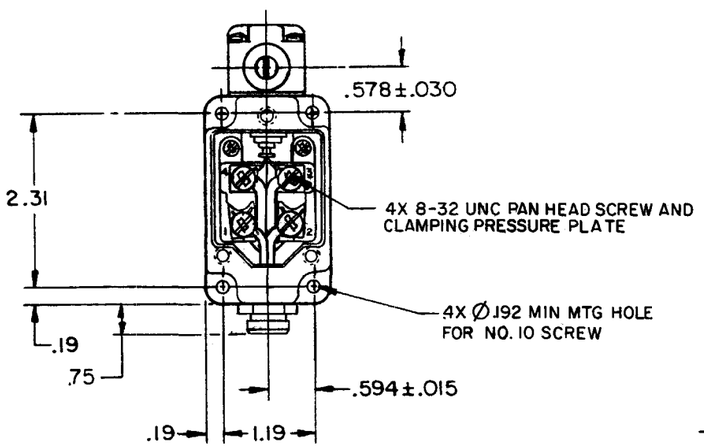

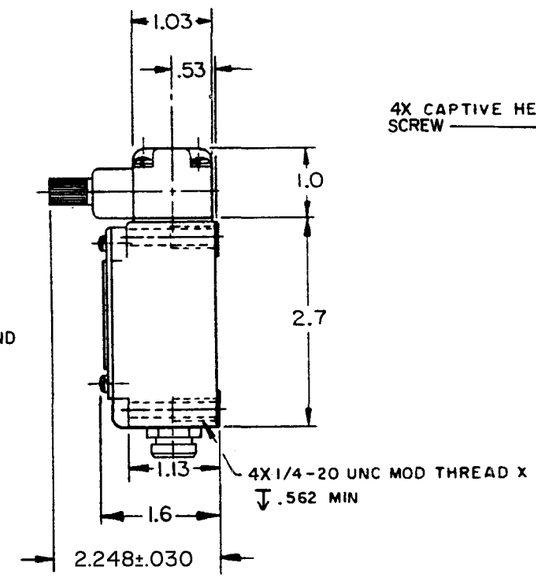

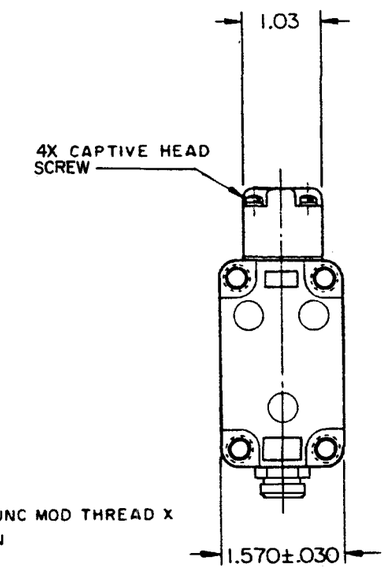

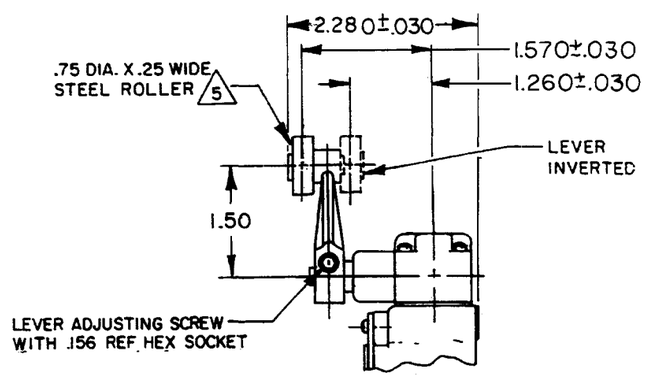

CAM TRACKING VIEW

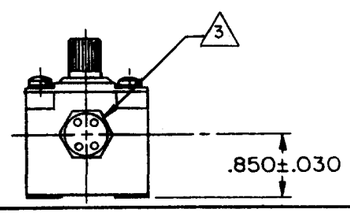

NOTES
1 - SWITCH IS ASSEMBLED FOR ACTUATION IN BOTH DIRECTIONS BUT MAY BE ADJUSTED TO ACTUATE IN THE CLOCKWISE DIRECTION ONLY OR THE COUNTERCLOCKWISE DIRECTION ONLY
2 - TO CONVERT SWITCH FOR ACTUATION IN EITHER THE CLOCKWISE OR COUNTERCLOCKWISE DIRECTION ONLY, REMOVE ACTUATOR HEAD AND ROTATE THE NOTCHED PLUNGER 90° TO THE RIGHT FOR CLOCKWISE ACTUATION OR 90° TO THE LEFT FOR COUNTERCLOCKWISE ACTUATION
3 A SEALED 4-PIN BRAD HARRISON RECEPTACLE IS PROVIDED. SEE CIRCUIT DIAGRAM.
4 ROLLER LEVER MAY BE LOCKED IN ANY POSITION THRU 360°
5 - LEVER FURNISHED UNASSEMBLED IN UNIT PACKING BOX

THIS DRAWING COVERS A PROPRIETARY ITEM AND IS THE PROPERTY OF MICRO SWITCH, A DIVISION OF MINNEAPOLIS-HONEYWELL REGULATOR CO. THIS DRAWING IS NOT TO BE COPIED OR USED WITHOUT THE APPROVAL OF MICRO SWITCH.

CHARACTERISTICS	
OPERATING TORQUE	4.5 IN-LB MAX
FULL OVERTRAVEL TORQUE	6 IN-LB MAX
RELEASE TORQUE	.75 IN-LB MIN
PRETRAVEL	20° MAX
DIFFERENTIAL TRAVEL	12° MAX
OVERTRAVEL	30° MIN
RELEASE TRAVEL	5° MIN
SWITCH-BASIC REPLACEMENT	2MN1

ELECTRICAL DATA

CONTACT ARRANGEMENT
(SEE CIRCUIT DIAGRAM)

10A-120,240,OR 480 VAC, 1/3 HP-120 VAC
3/4 HP-240 VAC; 0.8 A-115 VDC; 0.4 A-230 VDC
0.1 A-550 VDC
PILOT DUTY: 600 VAC MAX

SCALE 1/2 TO 1

DO NOT SCALE PRINT

UNLESS OTHERWISE NOTED
DIMENSIONS ARE IN INCHES

TOLERANCES ARE:

ONE PLACE	(.0)	±.030
TWO PLACE	(.00)	±.015
THREE PLACE	(.000)	±.005
ANGLES		±

WEIGHT 9 OZ

ANSI Y14.5M-1982 APPLIES

CATALOG LISTING 1LS1-R
PAGE 1 OF 1
M
DRAWING NUMBER
ISSUE 5
RELEASE NO. PR-19626
REPLACES

REVISIONS

A	CO 77031	JDB 17 DEC 93
B	CO 78083	GJW 16 JAN 95
C	CO-95463-B	DLT 3 SEP 99
D	ECO-200178	CSL 5 APR 00

DRAWN	LJF	18 FEB 92
CHECK	MAM	11 MAR 92
CHECK		
CHECK		

FORMTEK
FG-50378-003