MICRO SWITCH
FREEPORT, ILLINOIS, U S A
A DIVISION OF HONEYWELL
FED MFG CODE 81929

SWITCH - ENCLOSED

CATALOG LISTING
1LS1

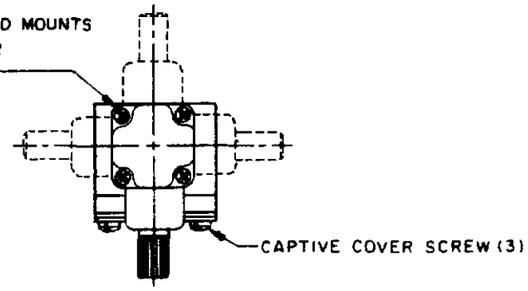

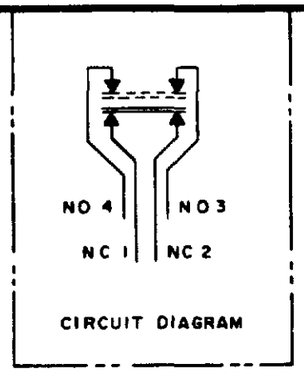

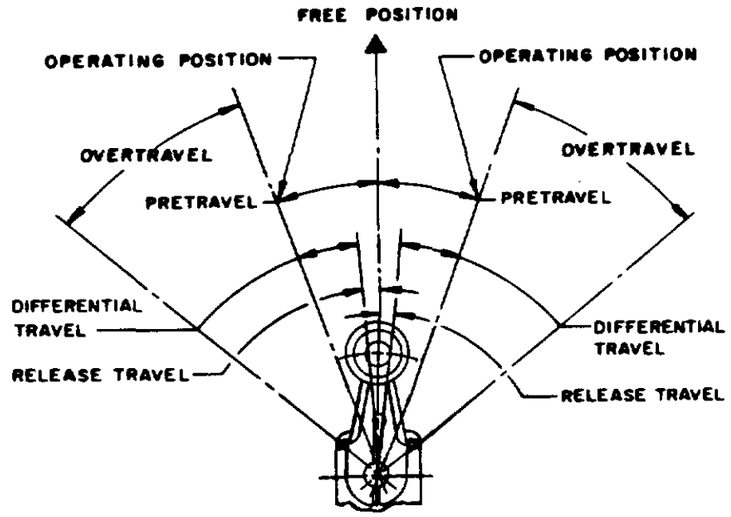

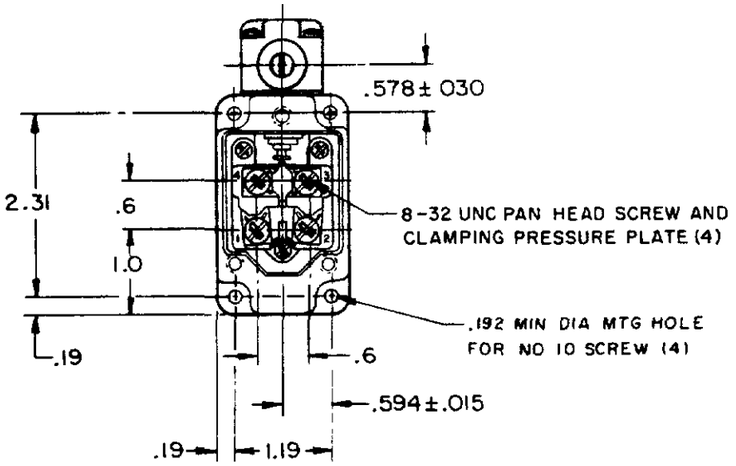

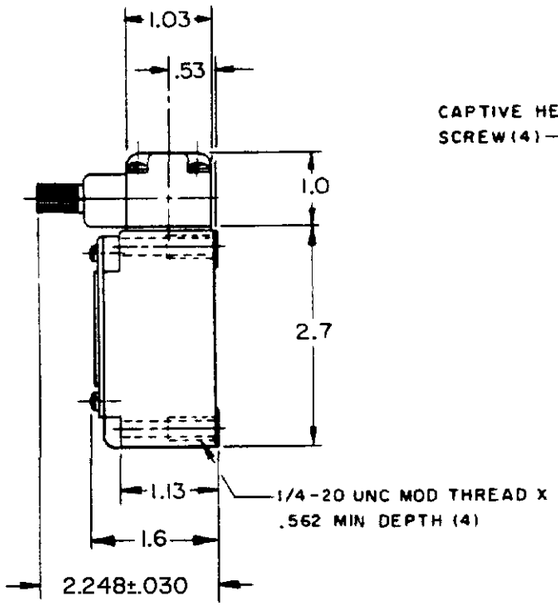

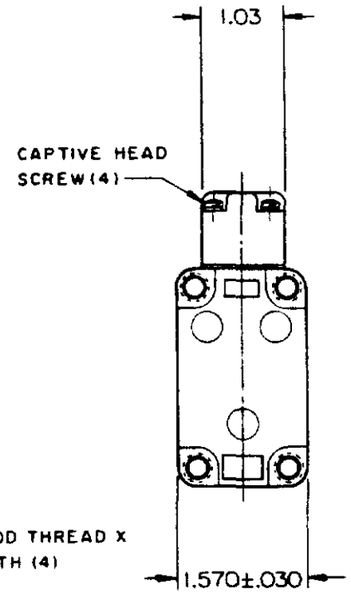

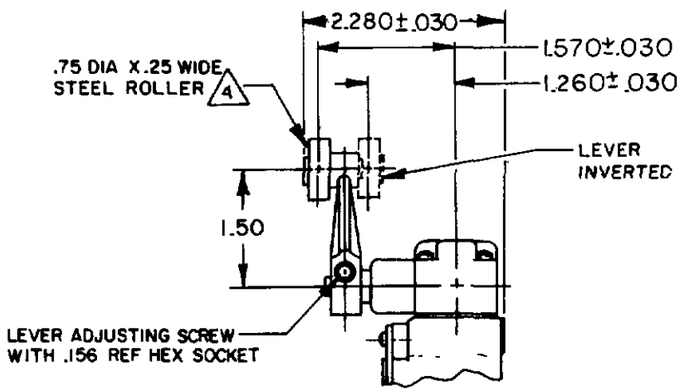

CAM TRACKING VIEW

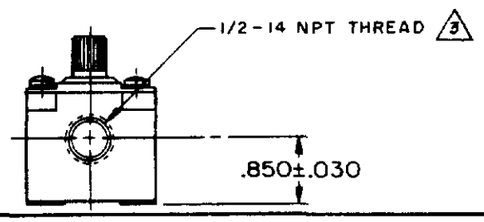

NOTES

1 - SWITCH IS ASSEMBLED FOR ACTUATION IN BOTH DIRECTIONS BUT MAY BE ADJUSTED TO ACTUATE IN THE CLOCKWISE DIRECTION ONLY OR THE COUNTERCLOCKWISE DIRECTION ONLY

2 - TO CONVERT SWITCH FOR ACTUATION IN EITHER THE CLOCKWISE OR COUNTERCLOCKWISE DIRECTION ONLY, REMOVE ACTUATOR HEAD AND ROTATE THE NOTCHED PLUNGER 90° TO THE RIGHT FOR CLOCKWISE ACTUATION OR 90° TO THE LEFT FOR COUNTERCLOCKWISE ACTUATION

(3) SEAL TO BE FURNISHED BY USER

(4) ROLLER LEVER MAY BE LOCKED IN ANY POSITION THRU 360°

5 - LEVER FURNISHED UNASSEMBLED IN UNIT PACKING BOX

THIS DRAWING COVERS A PROPRIETARY ITEM AND IS THE PROPERTY OF MICRO SWITCH, A DIVISION OF MINNEAPOLIS-HONEYWELL REGULATOR CO THIS DRAWING IS NOT TO BE COPIED OR USED WITHOUT THE APPROVAL OF MICRO SWITCH

CHARACTERISTICS	
OPERATING TORQUE	4.5 IN-LB MAX
FULL OVERTRAVEL TORQUE	6 IN-LB MAX
RELEASE TORQUE	.75 IN-LB MIN
PRETRAVEL	20° MAX
DIFFERENTIAL TRAVEL	12° MAX
OVERTRAVEL	30° MIN
RELEASE TRAVEL	5° MIN
SWITCH-BASIC REPLACEMENT	2MNI

ELECTRICAL DATA

CONTACT ARRANGEMENT
(SEE CIRCUIT DIAGRAM)

10 A-120, 240, OR 480 VAC, 1/3 HP-120 VAC
3/4 HP-240 VAC; 0.8 A-115 VDC, 0.4 A-230 VDC
0.1 A-550 VDC
PILOT DUTY, 600 VAC MAX

SCALE 1/2 TO 1

DO NOT SCALE PRINT

UNLESS OTHERWISE NOTED
DIMENSIONS ARE IN INCHES
TOLERANCES ARE.

ONE PLACE	(.0)	± .030
TWO PLACE	(.00)	±.015
THREE PLACE	(.000)	±.005
ANGLES		±2°

WEIGHT 9 OZ

CATALOG LISTING 1LS1 PAGE 1 OF 1
ISSUE M 24
REVISIONS
A CO-95463-B D L T 3 SEP 99
B ECO-200178 C S L 5 APR 00
REPLACES
RELEASE NO.
CHECK
DRAWN O M W 19 FEB 64
CHECK
DAW 20 MAR 64
CHECK
CHECK
FORMTEK
FO-50378-003