CHARACTERISTICS	
OPERATING TORQUE	4.5 IN-LB
FULL OVERTRAVEL TORQUE	6 IN-LB
RELEASE TORQUE	.75 IN-LB
PRETRAVEL	20° MAX
DIFFERENTIAL TRAVEL	12° MAX
OVERTRAVEL	30° MIN
RELEASE TRAVEL	5° MIN

ELECTRICAL DATA

CONTACT ARRANGEMENT (SEE CIRCUIT DIAGRAM)

L126 10A 125, 250 OR 480 VAC
1/3HP 125 VAC, 3/4HP 250 VAC
0.8A 125 VDC, 0.4A 250 VDC

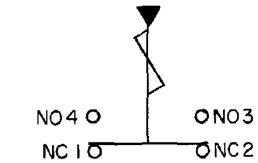

CIRCUIT DIAGRAM

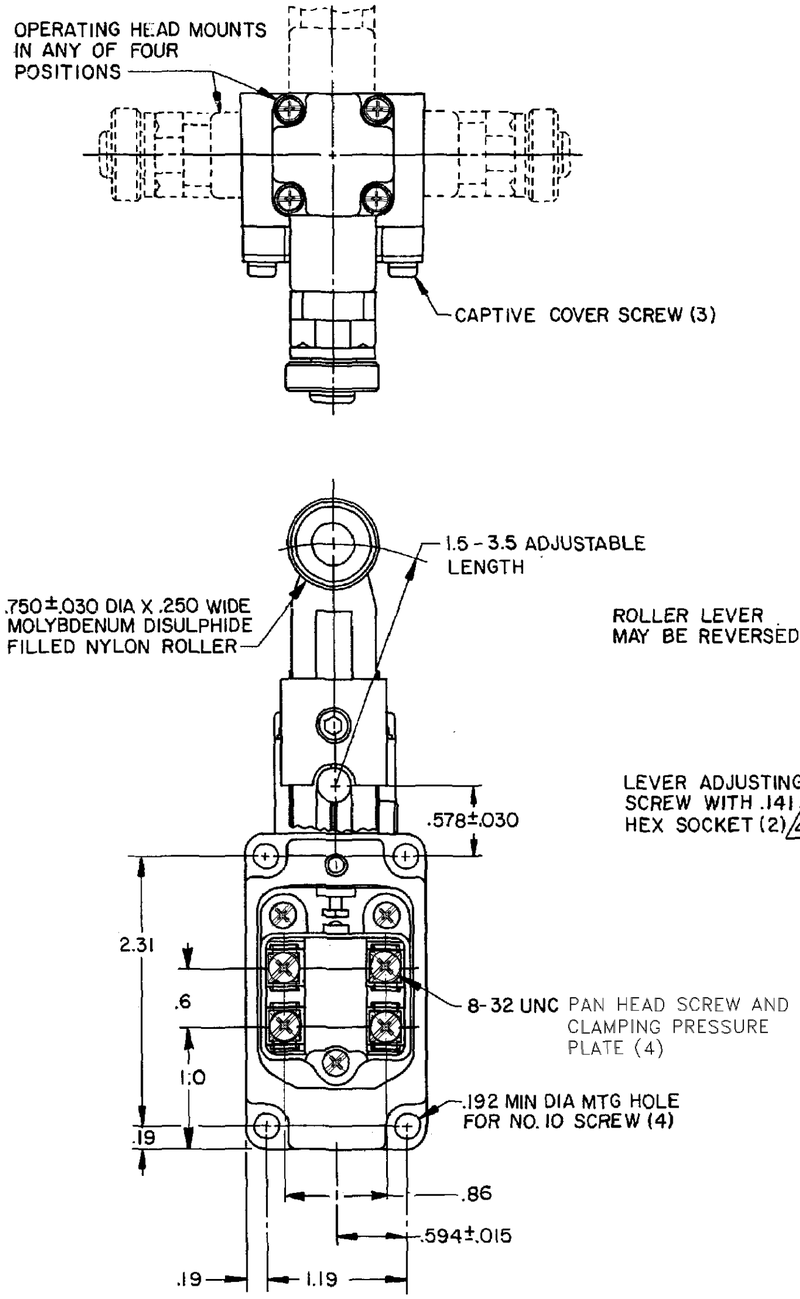

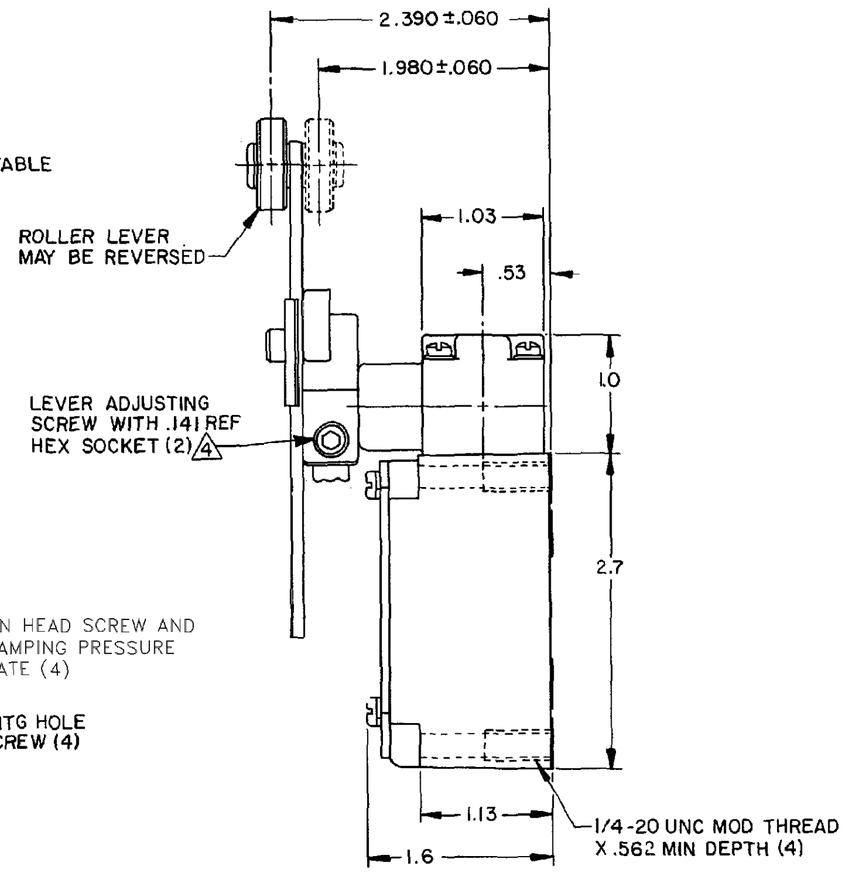

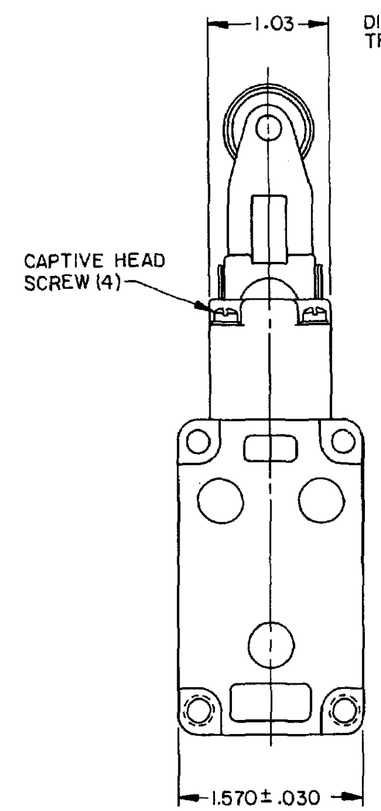

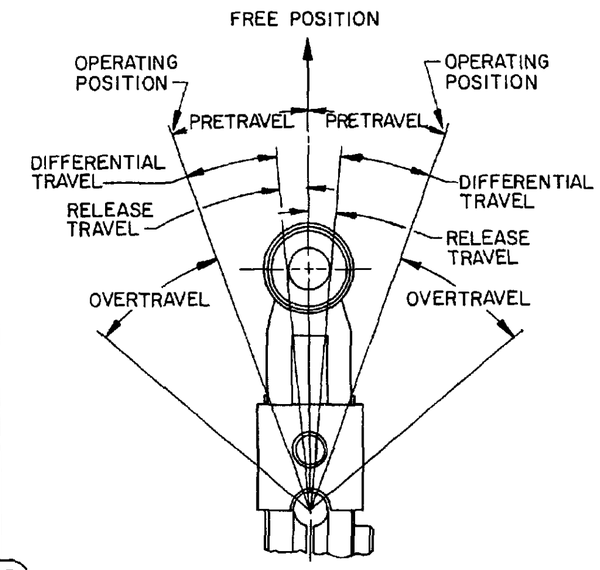

NOTES
1 - SWITCH IS ASSEMBLED FOR ACTUATION IN BOTH DIRECTIONS BUT MAY BE ADJUSTED TO ACTUATE IN THE CLOCKWISE DIRECTION ONLY OR THE COUNTERCLOCKWISE DIRECTION ONLY
2 - TO CONVERT SWITCH FOR ACTUATION IN EITHER THE CLOCKWISE OR COUNTERCLOCKWISE DIRECTION ONLY, REMOVE ACTUATOR HEAD AND ROTATE THE NOTCHED PLUNGER 90° TO THE RIGHT FOR CLOCKWISE ACTUATION OR 90° TO THE LEFT FOR COUNTERCLOCKWISE ACTUATION

4 ROLLER LEVER MAY BE LOCKED IN ANY POSITION THRU 360°
5 - LEVER FURNISHED UNASSEMBLED IN UNIT PACKING BOX
6 SEAL TO BE FURNISHED BY USER

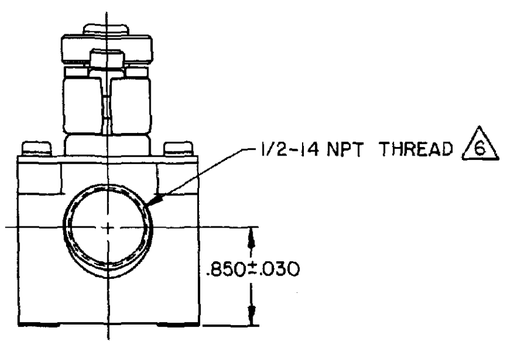

1LS3-L
PAGE 1 OF 1
RELEASE NO. SR-1283
DRAWING NUMBER
ISSUE 13
REPLACES
CHECK

REVISIONS
A CO-60488 T A D 10 DEC 86
B CO 66552 G R T 29 NOV 89
C CO 65412-C SAV 16 JUL 90
D CO 65814-E G R T 28 NOV 90
E CO-76997 GJW 27 MAR 95

FORMTEK
DRAWN T A D 10 DEC 86

THIS DRAWING COVERS A PROPRIETARY ITEM AND IS THE PROPERTY OF MICRO SWITCH, A DIVISION OF HONEYWELL. THIS DRAWING IS NOT TO BE COPIED OR USED WITHOUT THE APPROVAL OF MICRO SWITCH.

MICRO SWITCH
a Honeywell Division
FED. MFG. CODE 91929

SWITCH - ENCLOSED

CATALOG LISTING
1LS3-L

MASTER REDUCED

THIRD ANGLE PROJECTION
SCALE FULL
DO NOT SCALE PRINT

UNLESS OTHERWISE SPECIFIED TOLERANCES ARE

ONE PLACE	(.0)	±.030
TWO PLACE	(.00)	±.015
THREE PLACE	(.000)	±.005
ANGLES		±

WEIGHT