MICRO SWITCH
FREEPORT ILLINOIS U S A
A DIVISION OF HONEYWELL
FED. MFG. CODE 91929

SWITCH-TOGGLE

CATALOG LISTING
1TL141 SERIES
CHART I

THIS DRAWING COVERS A PROPRIETARY ITEM AND IS THE PROPERTY OF MICRO SWITCH. A DIVISION OF HONEYWELL. THIS DRAWING IS NOT TO BE COPIED OR USED WITHOUT THE APPROVAL OF MICRO SWITCH.

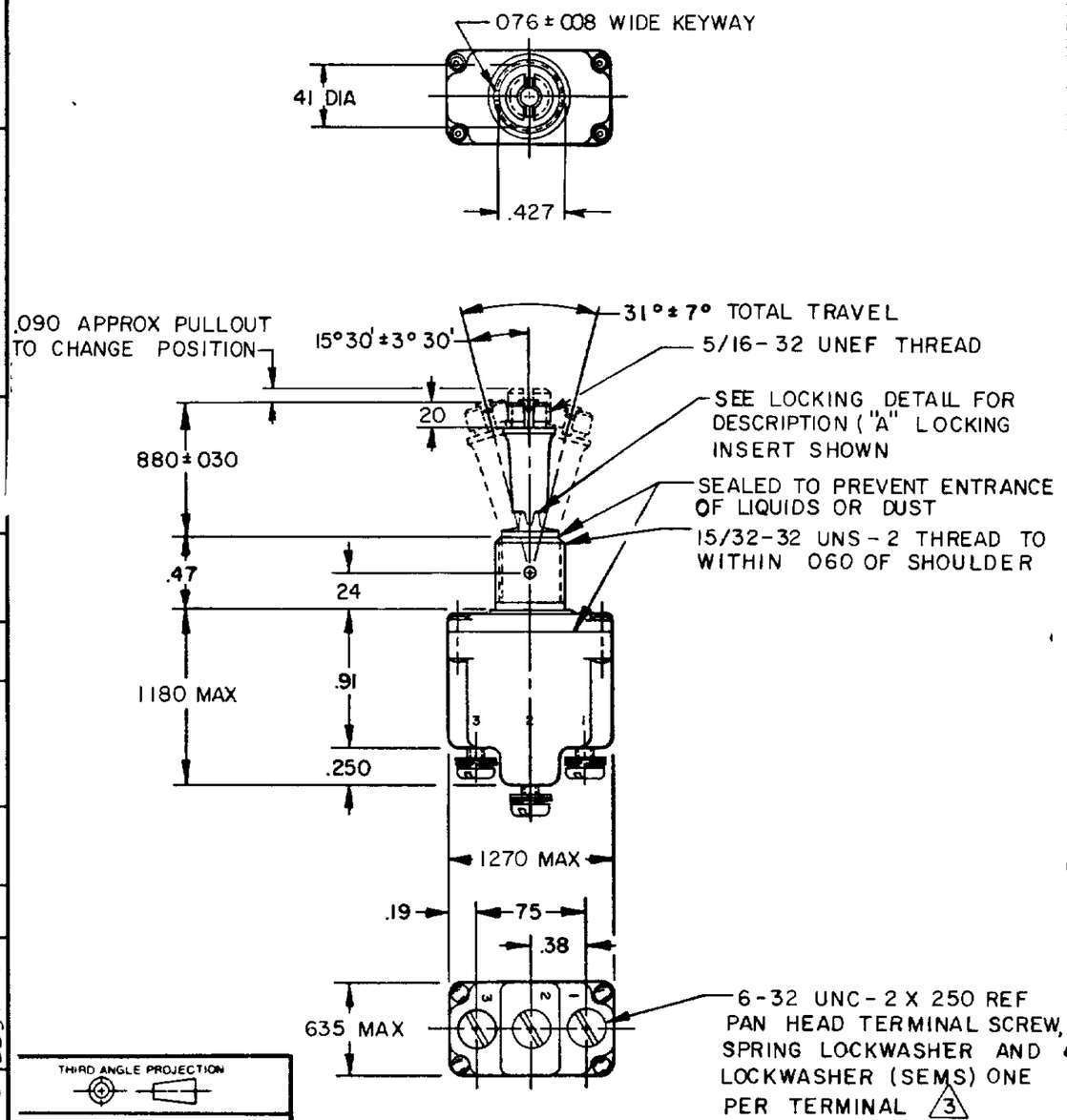

	CATALOG LISTING 6	AVAILABLE LOCKING COMBINATIONS FOR CONFIGURATION SEE LETTERED DETAILS	7 CIRCUIT MADE WITH TOGGLE LEVER IN: KEYWAY SIDE (1-2)	CENTER (1-2)	OPPOSITE KEYWAY (2-3)	CURRENT CAPACITY (AMPS) RESISTIVE LOAD DC VOLTS 28	125	250	AC VOLTS 125	250	LAMP LOAD 28 VDC	125 VAC	INDUCTIVE LOAD 28 VDC	125 VAC
	1TL141-1	A,B,D,E,F,G,H,J,K,L,M,N,P	ON	OFF	ON	20	75	5	15	6	5	3	15	10
	1TL141-2	D,F,G	OFF	NONE	ON									
	1TL141-3	D,F,G	ON	NONE	ON									
	1TL141-21	E,F,K,M	NONE	OFF	ON									
	1TL141-31	E,F,K,M	NONE	ON	ON									
	1TL141-4	F	MOM OFF	NONE	ON	15	.75	.5	15	6	4	2	10	7
	1TL141-5	E,F,K,L,M,N	MOM ON	OFF	ON									
	1TL141-6	F	MOM ON	NONE	OFF									
	1TL141-7	E,L,N	MOM ON	OFF	MOM ON									
	1TL141-8	F	MOM ON	NONE	ON									
	1TL141-51	E	NONE	ON	MOM ON									
	1TL141-61	E	MOM ON	OFF	NONE									

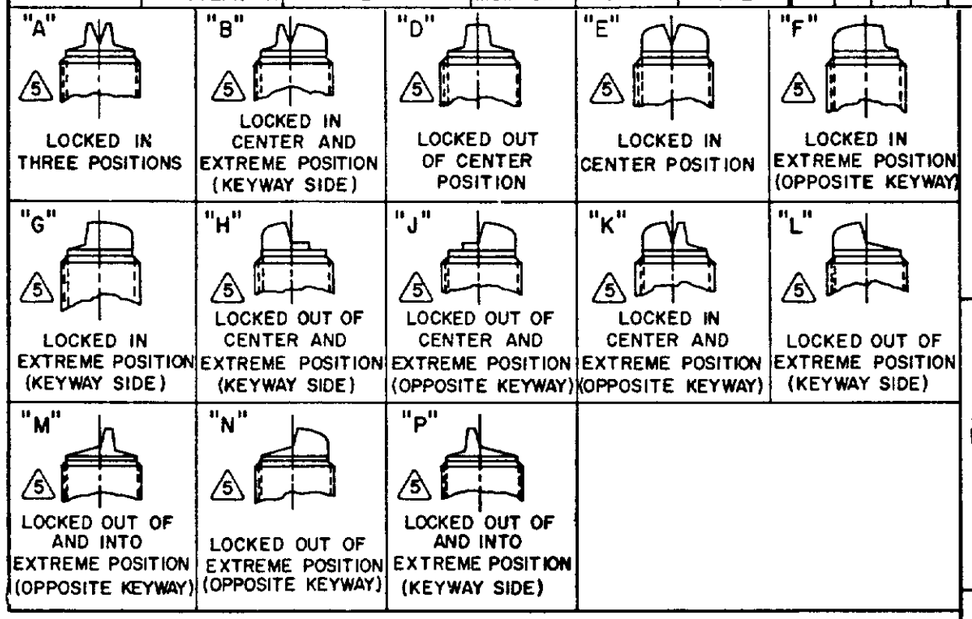

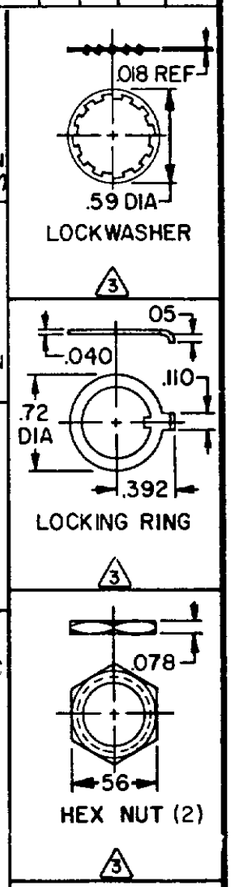

NOTES:

1 - SWITCHES ARE CAPABLE OF WITHSTANDING A TEMPERATURE OF 160°F CONTINUOUSLY AT FULL RATED LOAD

2 - CIRCUIT DESIGNATION AND MICRO SWITCH CATALOG LISTING MARKED ON SIDE OF SWITCH

3 FURNISHED UNASSEMBLED

4 - FOR TERMINAL COVER, SEE MICRO SWITCH CATALOG LISTING 5PA7

5 KEYWAY SHOWN ON LEFT SIDE

6 SUFFIX LETTER MUST BE ADDED FOR DESIRED TYPE OF TOGGLE LOCKING. SEE CHART FOR AVAILABLE LOCKING COMBINATIONS

7 APPLIES ONLY TO "ON" AND "MOMENTARY ON" POSITIONS

THIRD ANGLE PROJECTION

SCALE FULL

DO NOT SCALE PRINT

TOLERANCES
APPLY TO DESIGN UNITS. CONVERSIONS ARE ONLY FOR REFERENCE. UNLESS NOTED TOLERANCES ARE ±

	DIM mm	TOL. mm/m	DIM. in	TOL. mm/m
NO PLACES	X	1/04		
ONE PLACE	X.X	0.4/.016	X.X	0.8/.03
TWO PLACES	X.XX	0.15/.006	X.XX	0.38/.015
THREE PLACES			X.XXX	0.15/.006
ANGLES				

DESIGN UNITS SI METRIC ☐ US CUSTOMARY ■

RAW MATERIAL-COMMERCIAL STANDARD
MICRO SWITCH STANDARDS APPLY

DIMENSIONS ARE TO BE MET BEFORE PROTECTIVE COATINGS ARE APPLIED

WEIGHT 08 LBS APPROX

CATALOG LISTING 1TL141 SERIES CHART 1
PAGE 1 OF 1
M
ISSUE 11
RELEASE NO CO-78465
REPLACES 1TL141 SERIES

REVISIONS
A OBS CO34888 GLH 21 APR 75
B RE-IN CO78465 MAM 10 JUN 94

DRAWN MAM 10 JUN 94
CHECK KAG 28 JUN 94
CHECK
CHECK