MICRO SWITCH
FREEPORT ILLINOIS U S A
A DIVISION OF HONEYWELL
FED MFG CODE 81929

SWITCH - TOGGLE ABOVE PANEL MOUNT

CATALOG LISTING
1TP33 SERIES
CHART 1

THIS DRAWING COVERS A PROPRIETARY ITEM AND IS THE PROPERTY OF MICRO SWITCH, A DIVISION OF HONEYWELL. THIS DRAWING IS NOT TO BE COPIED OR USED WITHOUT THE APPROVAL OF MICRO SWITCH.

	CATALOG LISTING	CIRCUIT MADE WITH BUTTON DEPRESSED ON			ELECTRICAL DATA
		LUG SIDE (1-2)	CENTER (1-2)	OPPOSITE LUG (2-3)	
	1TP33 - 1	ON	OFF	ON	L191 15A 125, 250, 277 VAC 1/2HP 125 VAC 1HP 250, 277 VAC 5A 125 VAC "L"
	1TP33 - 2	OFF	NONE	ON	
	1TP33 - 3	ON	NONE	ON	
	1TP33 - 21	NONE	OFF	ON	
	1TP33 - 31	NONE	ON	ON	
	1TP33 - 4	MOM OFF	NONE	ON	L192 10A 125, 250, 277 VAC 1/4HP 125 VAC, 1/2HP 250, 277 VAC 3A 125 VAC "L"
	1TP33 - 5	MOM ON	OFF	ON	
	1TP33 - 6	MOM ON	NONE	OFF	
	1TP33 - 7	MOM ON	OFF	MOM ON	
	1TP33 - 8	MOM ON	NONE	ON	
	1TP33 - 51	NONE	ON	MOM ON	
	1TP33 - 61	MOM ON	OFF	NONE	

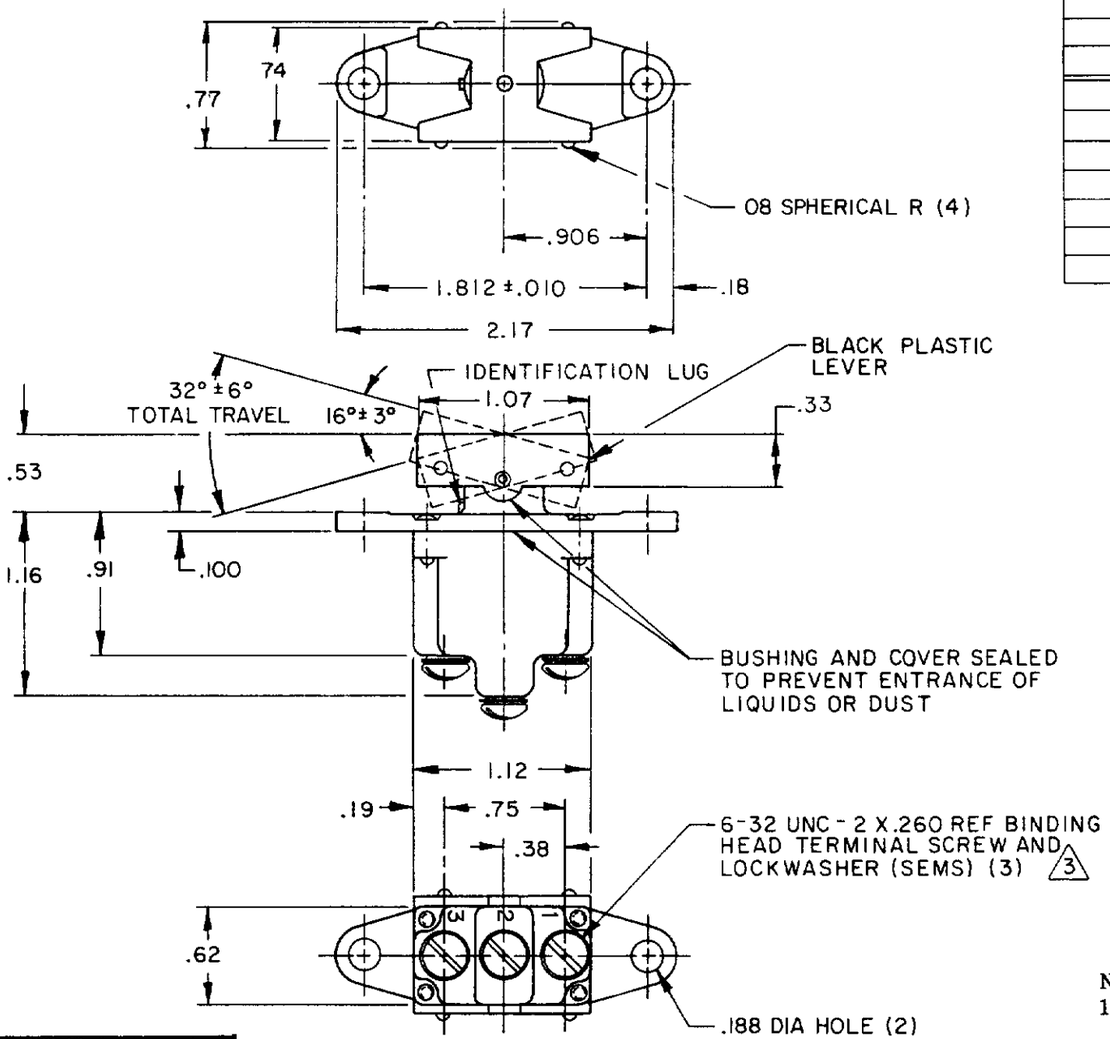

NOTES
1 - MICRO SWITCH CATALOG LISTING MARKED ON SIDE OF SWITCH
2 - THESE SWITCHES WILL WITHSTAND TEMPERATURE OF 160°F CONTINUOUSLY AT FULL RATED LOAD
△3 SCREWS FURNISHED UNASSEMBLED

THIRD ANGLE PROJECTION

SCALE FULL

DO NOT SCALE PRINT

TOLERANCES
APPLY TO DESIGN UNITS CONVERSIONS ARE ONLY FOR REFERENCE UNLESS NOTED TOLERANCES ARE ±

	DIM mm	TOL mm/in	DIM in	TOL mm/in
NO PLACES	X	1/ 04		
ONE PLACE	X X	0 4/ 016	X X	0 8/ 03
TWO PLACES	X XX	0 18/ 006	X XX	0 38/ 015
THREE PLACES			X XXX	0 13/ 005
ANGLES				

DESIGN UNITS SI METRIC ☐ US CUSTOMARY ☒

WEIGHT .09 LB EST

CATALOG LISTING 1TP33 SERIES CHART 1
PAGE 1 OF 1
RELEASE NO PR-12472
REPLACES
ISSUE M 6

REVISIONS

A	C057712 E	CJH DEC 85
B	C059943	J A P 23 JUL 86
C	C077897	TSM 15 JUN 94
D	C092334	J A S 30 JUL 98
E	C0-94412	DLM 13 OCT 99

FORMTEK
DRAWN C E C 6 OCT 83