CHARACTERISTICS	ELECTRICAL DATA
*OPERATING TORQUE - - - - 4.5 IN-LB MAX *FULL OVERTRAVEL TORQUE - - 6 IN-LB MAX *RELEASE TORQUE - - - - .75 IN-LB MIN PRETRAVEL - - - - - - - - - - - - 20° MAX DIFFERENTIAL TRAVEL - - - - - - - 12° MAX OVERTRAVEL - - - - - - - - - - - 30° MIN RELEASE TRAVEL - - - - - - - - - - 5° MIN *FORCES TAKEN AT 1.5 LEVER LENGTH SWITCH-BASIC REPLACEMENT - - - - - 2MN6	CONTACT ARRANGEMENT (SEE CIRCUIT DIAGRAM) 10A-120, 240, OR 480 VAC, 1/3 HP-120 VAC 3/4 HP-240 VAC; 0.8A-115 VDC, 0.4A-230 VDC .1A- 550 VDC PILOT DUTY ; 600 VAC MAX

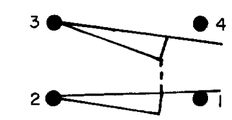

CIRCUIT DIAGRAM

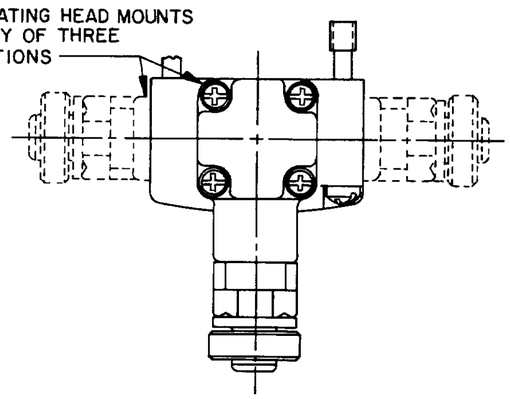

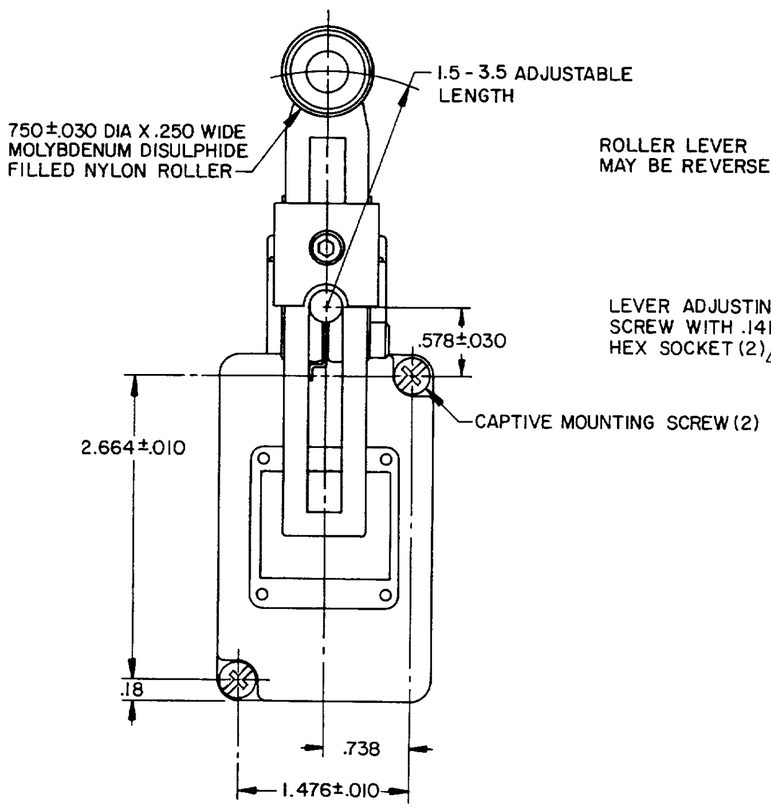

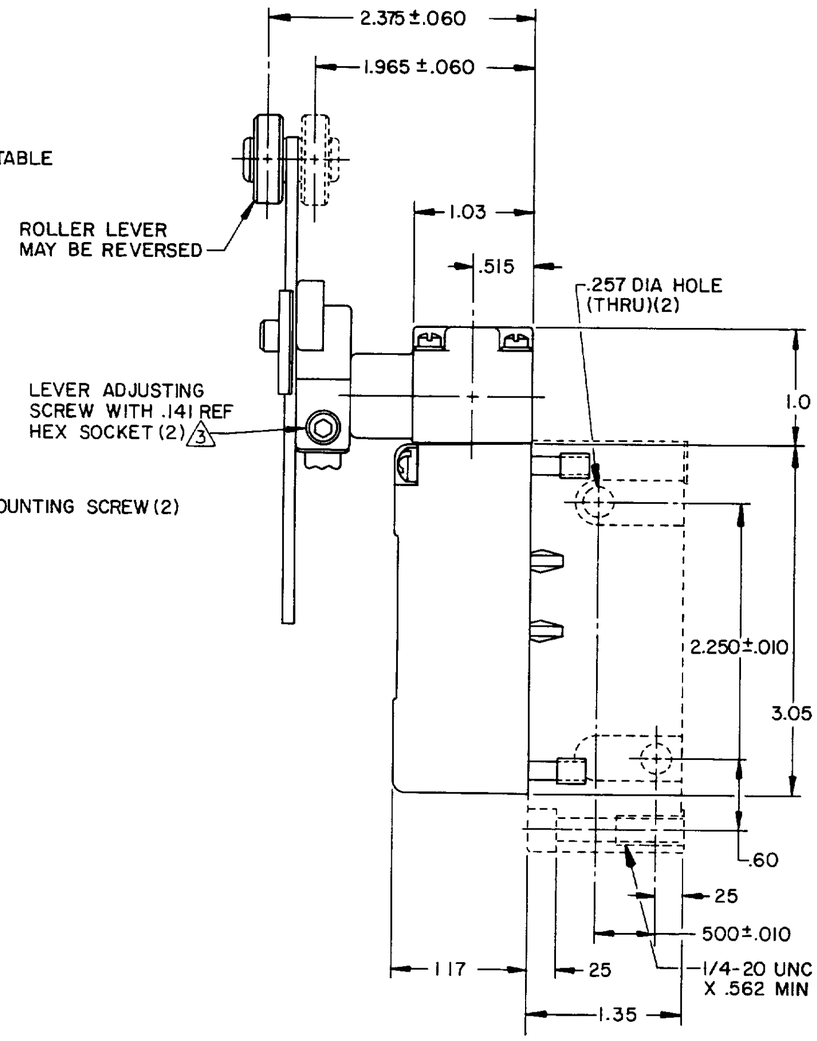

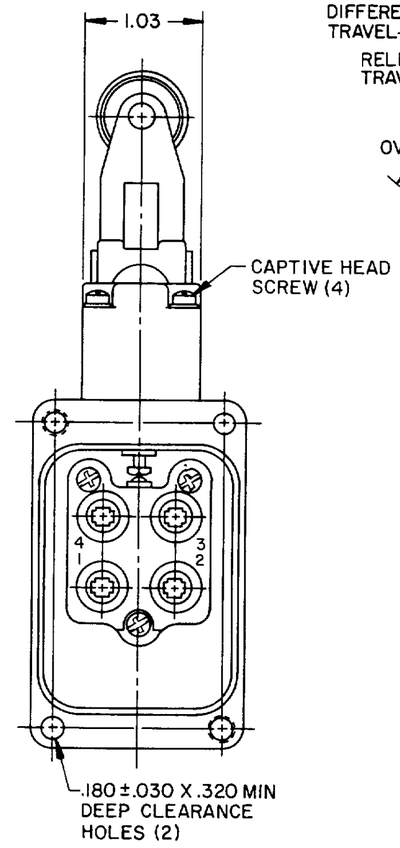

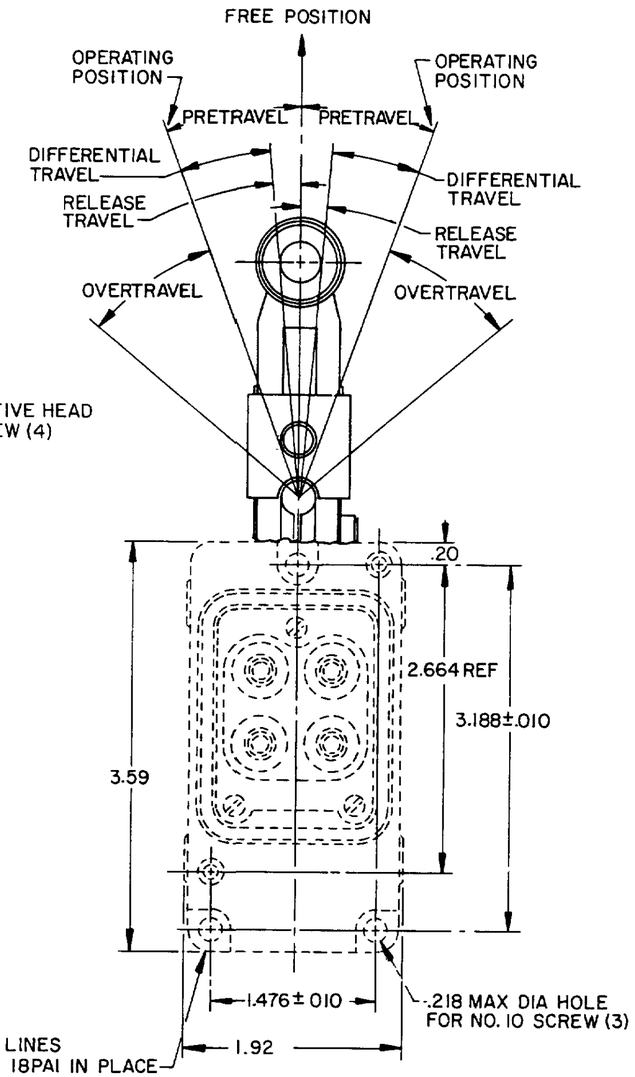

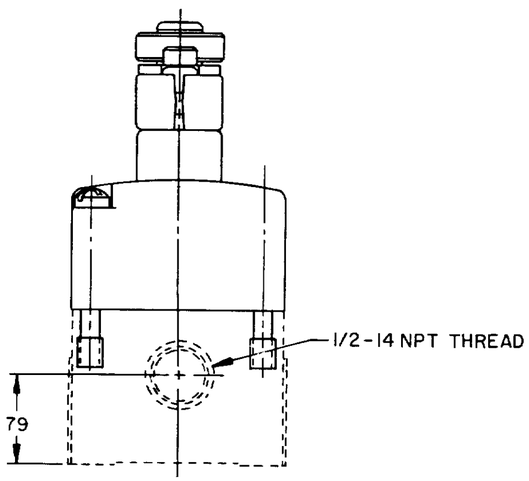

NOTES
1 - SWITCH IS ASSEMBLED FOR ACTUATION IN BOTH DIRECTIONS BUT MAY BE ADJUSTED TO ACTUATE IN THE CLOCKWISE DIRECTION ONLY OR THE COUNTERCLOCKWISE DIRECTION ONLY
2 - TO CONVERT SWITCH FOR ACTUATION IN EITHER THE CLOCKWISE OR COUNTERCLOCKWISE DIRECTION ONLY, REMOVE ACTUATOR HEAD AND ROTATE THE NOTCHED PLUNGER 90° TO THE RIGHT FOR CLOCKWISE ACTUATION OR 90° TO THE LEFT FOR COUNTERCLOCKWISE ACTUATION

3 ROLLER LEVER MAY BE LOCKED IN ANY POSITION THRU 360°
4 - LEVER FURNISHED UNASSEMBLED IN UNIT PACKING BOX

REVISIONS		
A	CO60488	T A D 17 DEC 86
B	CO 66552	G R T 29 NOV 89
C	CO-77031	J D B 22 DEC 93
D	CO-78083	G J W 18 JAN 95

201LS3 M

DRAWING NUMBER — RELEASE NO — REPLACES — ISSUE — CHECK

DRAWN T A D 17 DEC '86 — CHECK — CHECK

FO-52863-C

THIS DRAWING COVERS A PROPRIETARY ITEM AND IS THE PROPERTY OF MICRO SWITCH A DIVISION OF HONEYWELL. THIS DRAWING IS NOT TO BE COPIED OR USED WITHOUT THE APPROVAL OF MICRO SWITCH.

MICRO SWITCH
a Honeywell Division
FED MFG CODE 91929

SWITCH - ENCLOSED

CATALOG LISTING
201LS3

THIRD ANGLE PROJECTION

SCALE FULL

DO NOT SCALE PRINT

UNLESS OTHERWISE SPECIFIED TOLERANCES ARE

ONE PLACE	(.0)	±.030
TWO PLACE	(.00)	±.015
THREE PLACE	(.000)	±.005
ANGLES		±

WEIGHT