DRAWING MADE IN THIRD ANGLE PROJECTION

THIS DRAWING IS UNPUBLISHED. RELEASED FOR PUBLICATION ,19 .
© COPYRIGHT 19 BY AMP INCORPORATED. ALL INTERNATIONAL RIGHTS RESERVED.

REV	SUBR	#	#	REVISIONS					
				ZONE	LTR	DESCRIPTION		DATE	APPD
					M	REV PER 0630-0646-00	CT	7-01	JM

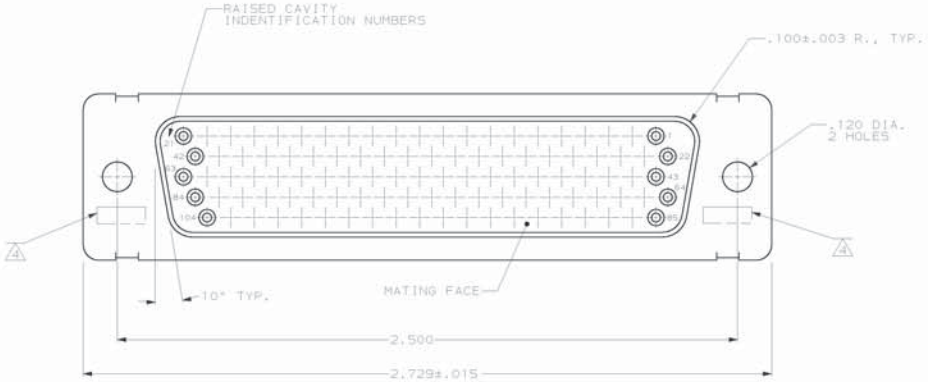

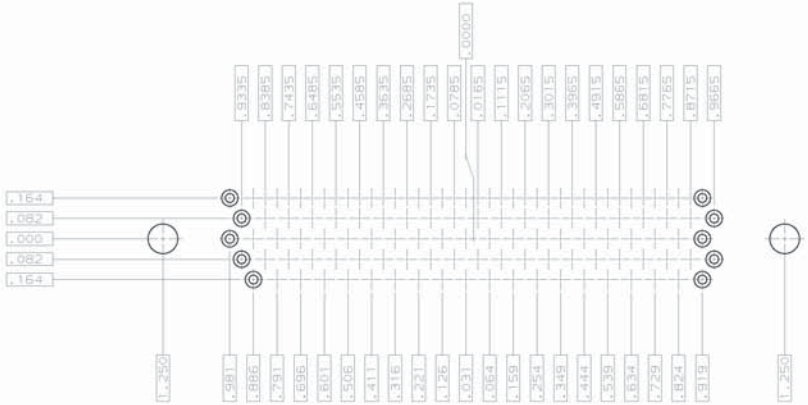

RECOMMENDED P.C. BOARD LAYOUT

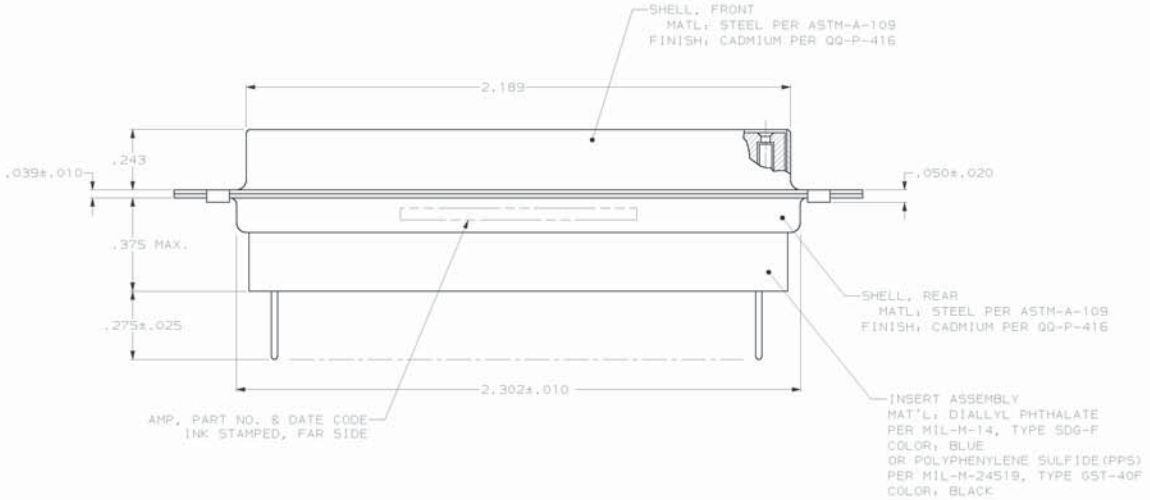

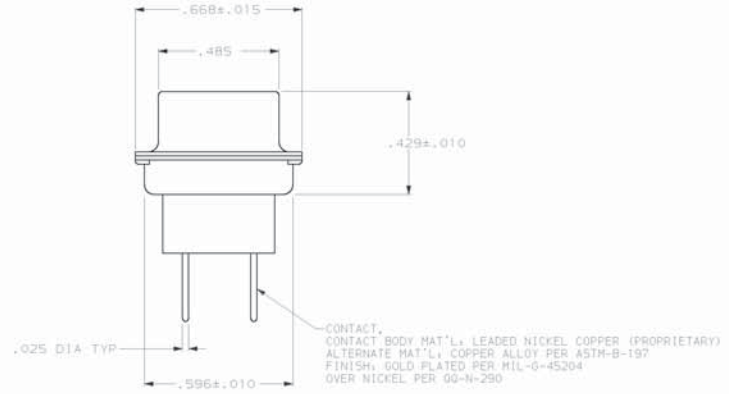

1. .040 DIA HOLE IS RECOMMENED FOR P.C. BOARD
2. CONNECTOR MATES WITH ANY AMP 104 POSN PLUG
3. REPLACEMENT SOCKET AMP# 207684-4
4. UL/CSA DESIGNATION STAMPED IN THIS AREA,OPTIONAL

208877-1
PART NO

DO NOT SCALE PRINT. UNLESS SPECIFIED DIMENSIONS IN INCHES TOLERANCES ON : 2 PLC DEC ± - 3 PLC DEC ± .005 ANGLES ± 0°30'	DR 1-9-88 C.C.THOMAS	AMP INCORPORATED Harrisburg, Pa 17105
	CHK 1-26-88 F.C.BALLEW III	AMPLIMITE 104 POSN. RCPT. ASSY., WITH LOADED POSTED CONTACTS SIZE 6, SERIES 90
MATERIAL SEE CALLOUTS	APPD 1-26-88 F.C.BALLEW III	
	APPD 1-26-88 D.J.M.	
	PRODUCT SPEC -	
FINISH SEE CALLOUTS	APPLICATION SPEC -	SIZE D · FSCM NO 00779 · DRAWING NO 208877
	WEIGHT -	SCALE 4:1 · SHEET 1 OF 1

CUSTOMER DRAWING