MICRO SWITCH
FREEPORT, ILLINOIS, U S A
A DIVISION OF HONEYWELL
FED. MFG. CODE 91929

SWITCH–ENCLOSED

CATALOG LISTING
21CX 22CX
SERIES CHART 1

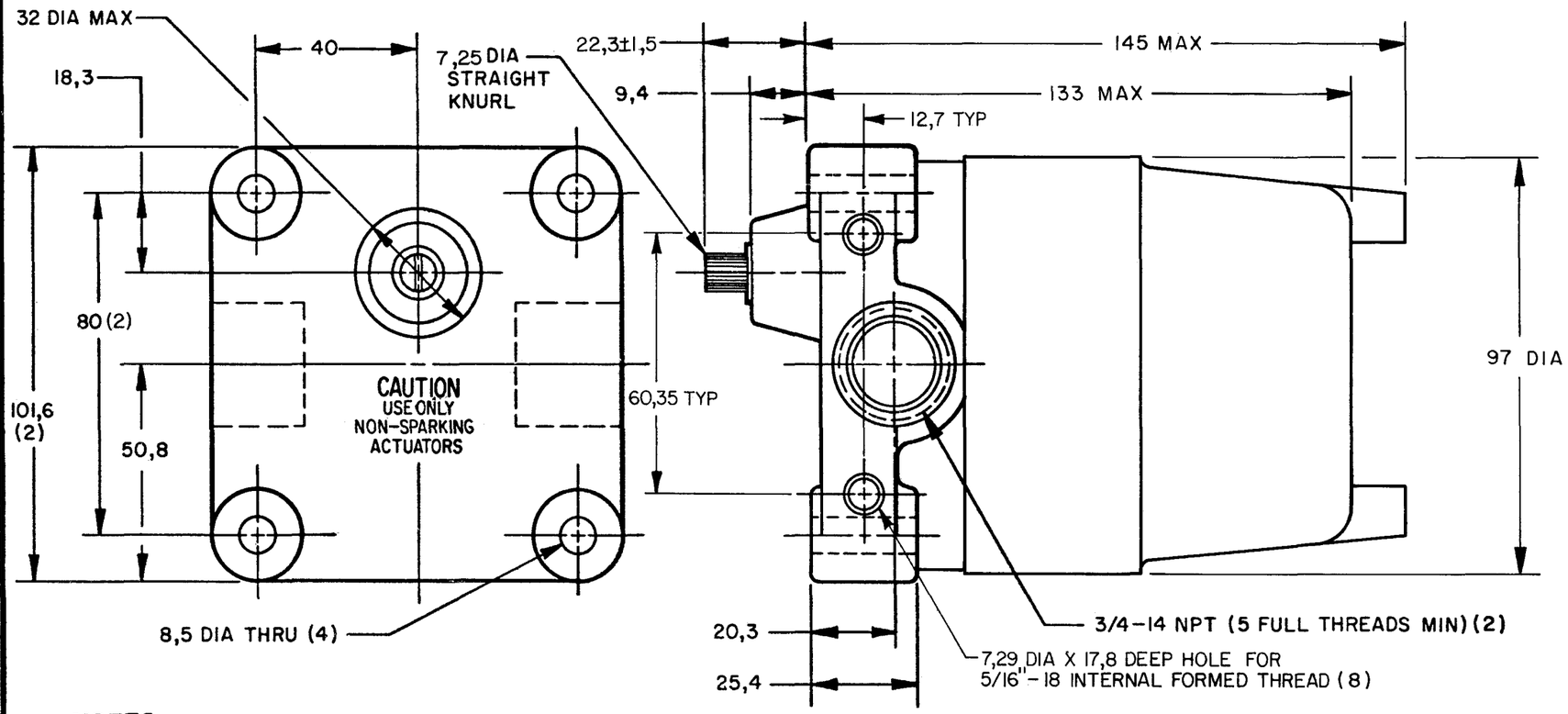

CONVERSION CHART	
7,25	.285
7,29	.287
7,92	.312
9,4	.37
12,7	.50
17,8	.70
18,3	.72
20,3	.80
22,3±1,5	.880±.059
25,4	1.00
32,0	1.26
40,0	1.57
50,8	2.00
60,35	2.38
80,0	3.15
97,0	3.82
101,6	4.00
133,0	5.24
145,0	5.71
1,25 Nm	.922 PF
0,113 Nm	.083 PF
1,25 Kg	2.75 LB

NOTES

1 - EXPLOSION PROOF-UNDERWRITERS LAB INC LISTING FOR HAZARDOUS LOCATIONS CLASS I, GROUPS C AND D; CLASS II, GROUPS E, F AND G
2 - ALUMINUM ENCLOSURE FINISHED WITH BLUE AND BLACK EPOXY PAINT
3 - 6-32 UNC X 7,92 REF PAN HEAD TERMINAL SCREW AND LOCK-WASHER (SEMS TERMI-LOX) (3 PER BASIC)
4 - CAMS MAY BE REPOSITIONED IN 7°20' INCREMENTS
5 - FOR USE IN TEMPERATURES UP TO 85° C
6 - SEE (M) 7CX CHARTS 1 AND 2 FOR LEVER ACTUATORS

CAT. LIST 6	DESCRIPTION	ELECTRICAL DATA
(E)	3 BASICS; EACH OPERATES CLOCKWISE & COUNTER CLOCKWISE	UL LISTED-FILE E14274 CODE L96 15A-125, 250 OR 480 VAC 1/8 HP-125 VAC; 1/4 HP-250 VAC 1/2 A-125 VDC; 1/4 A-250 VDC
21CX4-	4 BASICS; EACH OPERATES CLOCKWISE & COUNTER CLOCKWISE	
21CX6-	4 BASICS; 2 OPERATE CLOCKWISE ONLY; 2 OPERATE COUNTER CLOCKWISE ONLY	
21CX4C	4 BASICS; EACH OPERATES CLOCKWISE & COUNTER CLOCKWISE	
2172CX4	4 BASICS; EACH OPERATES CLOCKWISE & COUNTER CLOCKWISE	UL LISTED-FILE E14274 1A - 125 VAC L22
(E)	3 BASICS; EACH OPERATES CLOCKWISE & COUNTER CLOCKWISE	UL LISTED-FILE E14274 CODE L23 20A-125, 250 OR 480 VAC 10A-125 VAC "L" 1HP-125 VAC; 2HP-250 VAC 1/2A-125 VDC; 1/4A-250 VDC
22CX4-	4 BASICS; EACH OPERATES CLOCKWISE & COUNTER CLOCKWISE	

THIS DRAWING COVERS A PROPRIETARY ITEM AND IS THE PROPERTY OF MICRO SWITCH, A DIVISION OF HONEYWELL. THIS DRAWING IS NOT TO BE COPIED OR USED WITHOUT THE APPROVAL OF MICRO SWITCH.

THIRD ANGLE PROJECTION

SCALE 3/4 TO 1

DO NOT SCALE PRINT

TOLERANCES
APPLY TO DESIGN UNITS. CONVERSIONS ARE ONLY FOR REFERENCE. UNLESS NOTED, TOLERANCES ARE ±

	DIM. mm	TOL. mm/in	DIM. in	TOL. mm/in
NO PLACES	X	1/.04		
ONE PLACE	X.X	0.4/.016	X.X	0.8/.03
TWO PLACES	X.XX	0.15/.006	X.XX	0.38/.015
THREE PLACES			X.XXX	0.13/.005
ANGLES				

DESIGN UNITS SI METRIC ■ US CUSTOMARY □

RAW MATERIAL–COMMERCIAL STANDARD MICRO SWITCH STANDARDS APPLY

DIMENSIONS ARE TO BE MET BEFORE PROTECTIVE COATINGS ARE APPLIED

WEIGHT 1.25 Kg APPROX

CHARACTERISTICS	21CX	22CX
OPERATING FORCE	1,25 Nm MAX	1,25 Nm MAX
RELEASE FORCE	0,113 Nm MIN	0,113 Nm MIN
PRETRAVEL	15° MAX	15° MAX
DIFFERENTIAL TRAVEL	10° MAX	10° MAX
OVERTRAVEL	90° MIN	90° MIN

CONTACT ARRANGEMENT
S P D T
(EACH BASIC)

REVISIONS			
A	C080111	JAK 21 MAR 95	19 SEPT 77
B	PR-22221	JAK 5 JUN 96	MER
C	PR-22511	JAK 6 DEC 96	CHECK
D	C095297	GJW 7 JUL 99	19 SEPT 77
E	201884	JAH 12 DEC 00	CHECK

21CX 22CX SERIES CHART 1
PAGE 1 OF 1
RELEASE NO. PR-6800-T
REPLACES
DRAWING NUMBER M
ISSUE 14 13 17 15
CHECK
DRAWN JAL 31 AUG 77
RASTER