Number of contacts

9–50

Turned solder pins, straight

Identification	No. of contacts	Part No.	
Performance levels Explanations see page 05.04 Other performance levels on request		Performance level 3	Performance level 2
Male connector metal shell with dimples	9	09 67 009 5654	09 67 009 5655
	15	09 67 015 5654	09 67 015 5655
	25	09 67 025 5654	09 67 025 5655
	37	09 67 037 5654	09 67 037 5655
	50	09 67 050 5654[1)]	09 67 050 5655[1)]
Female connector metal shell	9	09 67 009 4754	09 67 009 4755
	15	09 67 015 4754	09 67 015 4755
	25	09 67 025 4754	09 67 025 4755
	37	09 67 037 4754	09 67 037 4755
	50	09 67 050 4754[1)]	09 67 050 4755[1)]

Male connector

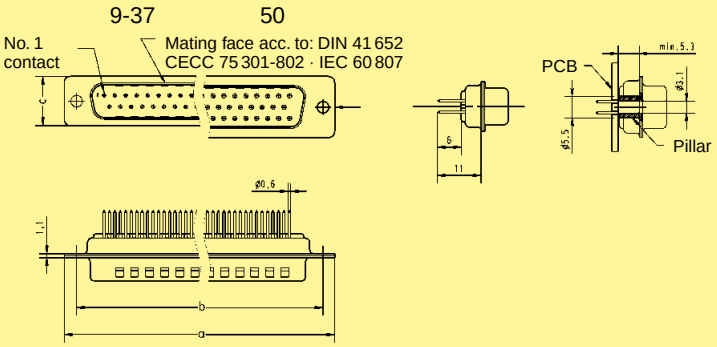

Female connector

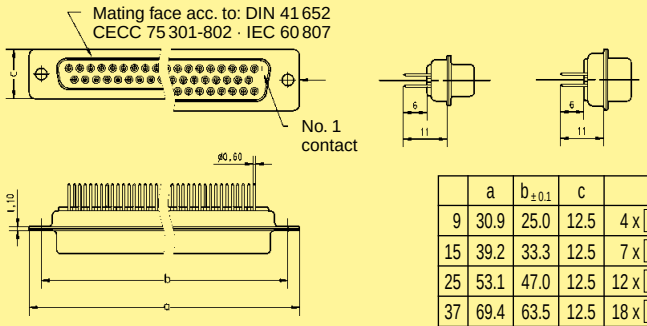

	a	$b_{\pm 0.1}$	c	g	h
9	30.9	25.0	12.5	4 x 2.74 = 10.96	3 x 2.74 = 8.22
15	39.2	33.3	12.5	7 x 2.74 = 19.18	6 x 2.74 = 16.44
25	53.1	47.0	12.5	12 x 2.76 = 33.12	11 x 2.76 = 30.36
37	69.4	63.5	12.5	18 x 2.76 = 49.68	17 x 2.76 = 46.92
50	67.0	61.1	15.4	16 x 2.76 = 44.16	15 x 2.76 = 41.40

Board drillings

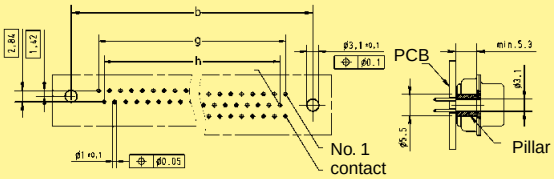

Dimensions in mm

[1)] Not normally kept in stock

Mating conditions see page 05.04