MICRO SWITCH
A DIVISION OF MINNEAPOLIS-HONEYWELL REGULATOR COMPANY
FREEPORT, ILLINOIS
FED. MFR. CODE 91929

ASSEMBLY-SWITCH

CATALOG LISTING
24ACI

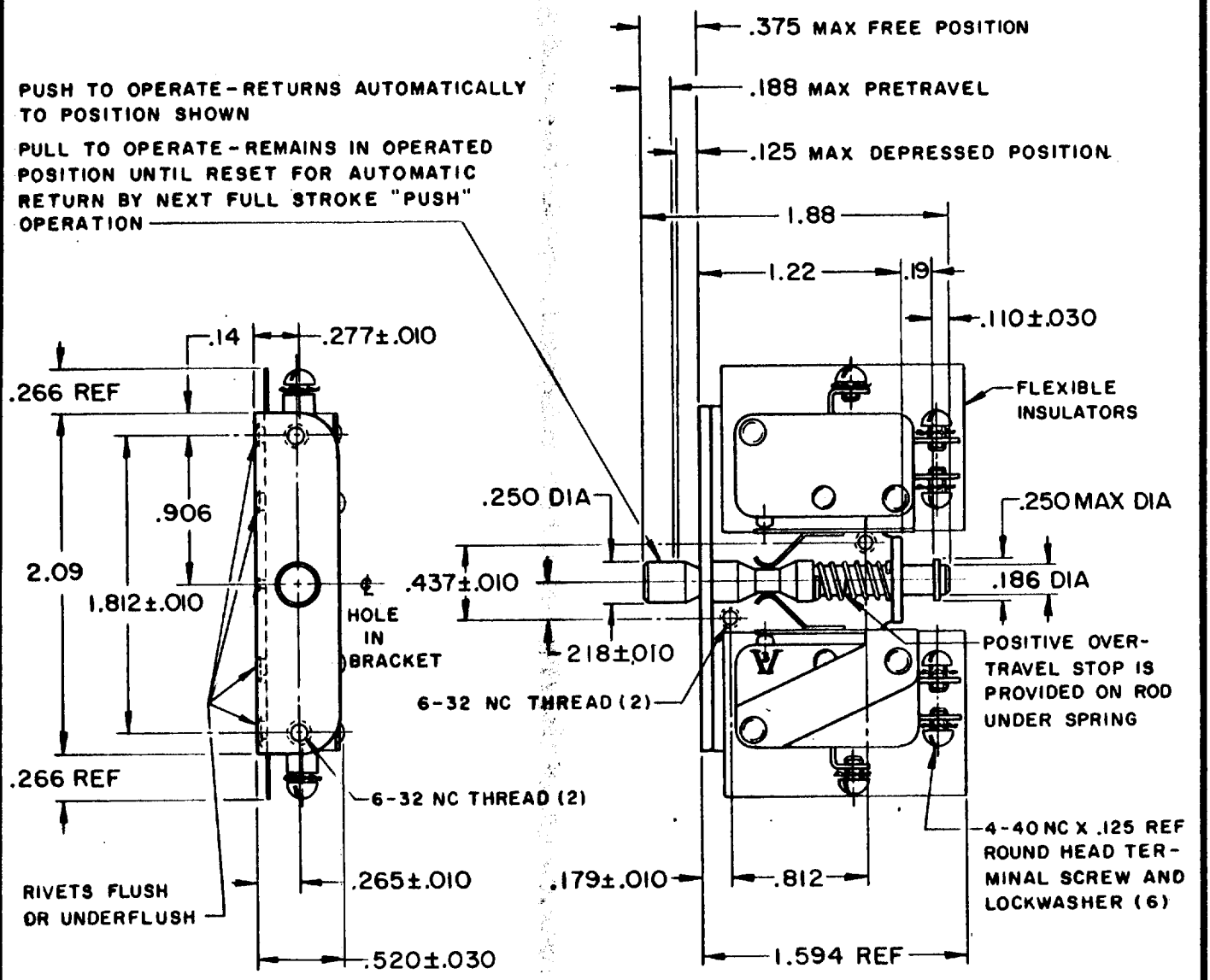

NOTE-
1- UNIT INCLUDES CAT. LIST. V3-13 BASIC SWITCH (2)
2- SWITCHES DO NOT NECESSARILY OPERATE SIMULTANEOUSLY
3- NOTCH IN ACTUATOR ROD WILL PERMIT .035 DISPLACEMENT BETWEEN END OF ROD AND HOLE IN BRACKET
4- BASIC SWITCH PLASTIC PARTS ARE MADE OF MINERAL FILLED PHENOLICS
5- ACTUATOR ROD MADE OF HIGH STRENGTH PLASTIC

THIS DRAWING COVERS A PROPRIETARY ITEM AND IS THE PROPERTY OF MICRO SWITCH, A DIVISION OF MINNEAPOLIS-HONEYWELL REGULATOR CO. THIS DRAWING IS NOT TO BE COPIED OR USED WITHOUT THE APPROVAL OF MICRO SWITCH.

CHARACTERISTICS

TOTAL TRAVEL
.250 APPROX. PUSH DIRECTION
.188 APPROX. PULL DIRECTION

ELECTRICAL DATA

CONTACT ARRANGEMENT	BREAK DISTANCE
S P D T (2)	.040 APPROX

(A) 15 A-1/3 HP-125 OR 250 VAC
1/2 A-125 VDC; 1/4 A-250 VDC

(B)

SCALE FULL
DO NOT SCALE PRINT

UNLESS OTHERWISE SPECIFIED
DIMENSIONS ARE IN INCHES
TOLERANCES ARE:

ONE PLACE	(.0)	±.030
TWO PLACE	(.00)	±.015
THREE PLACE	(.000)	±.005
ANGLES		±

WEIGHT

DRAWN	MBF	25 MAR 60	
CHECK	GCH	4 APR. '60	
CHECK	RJS	28 MAR '60	
CHECK			
REPLACES			
RELEASE NO.	SR 8877		
DRAWING NUMBER	M		
ISSUE	3		

REVISIONS
A CORR K L B 22 APR 60
B CO 17056 L M H 19 JUN 62

24ACI

FO-50378