Number of contacts

13–25

Mixed shells for signal crimp contacts

Identification	No. of contacts[1]	Part No. male connectors	Part No. female connectors
	13W3	09 69 312 0133	09 69 302 0133
	25W3	09 69 412 0253	09 69 402 0253

Male connectors

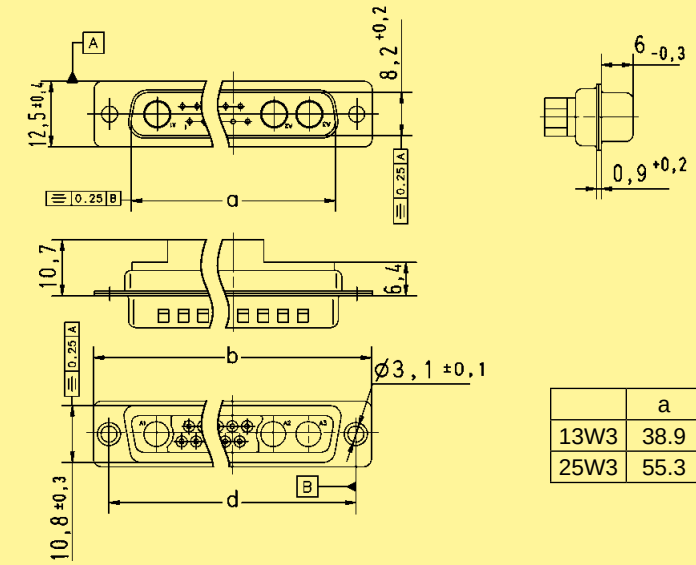

	a	b	d	e
13W3	38.9	53.0	47.04	38.5
25W3	55.3	69.3	63.50	54.9

Female connectors

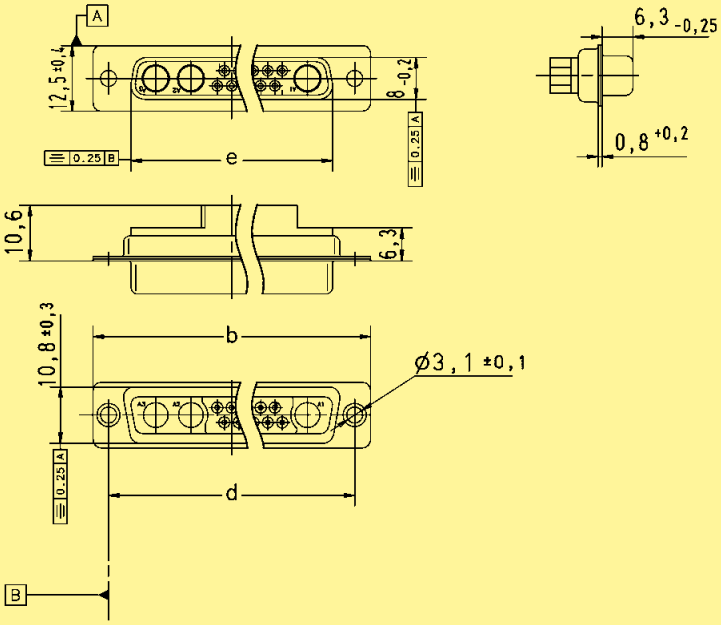

Dimensions in mm

[1] Explanations see page 05.49
Board drillings see pages 05.76 ff
Order special contacts separately. See pages 05.67 ff