REV.	ECN NO OR DESCRIPTION	REVISED	DATE
C	修改與實物相符	EVEN	11/14-'03

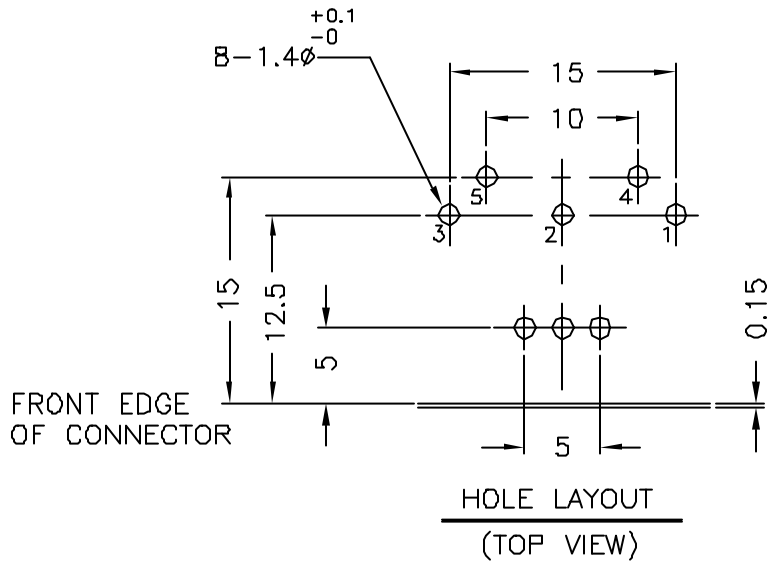

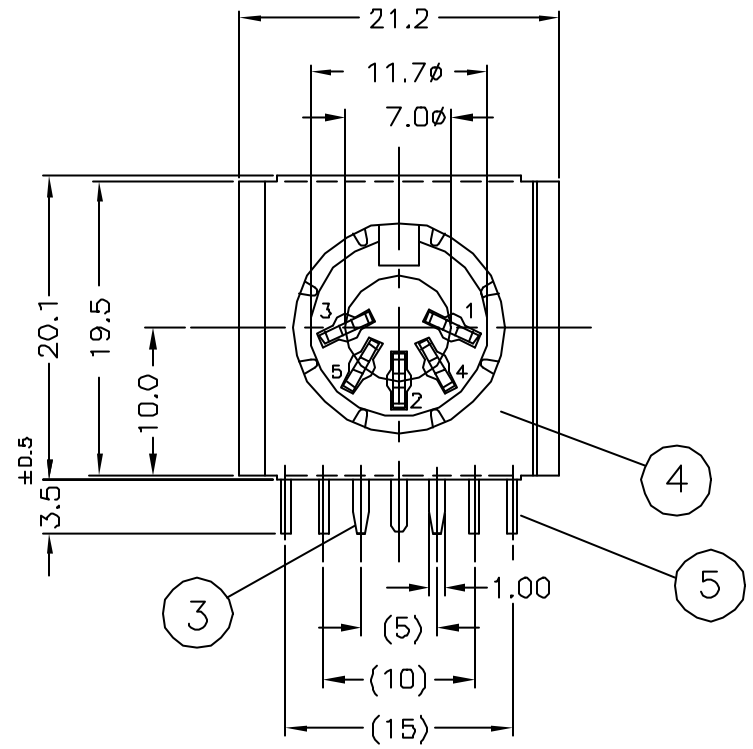

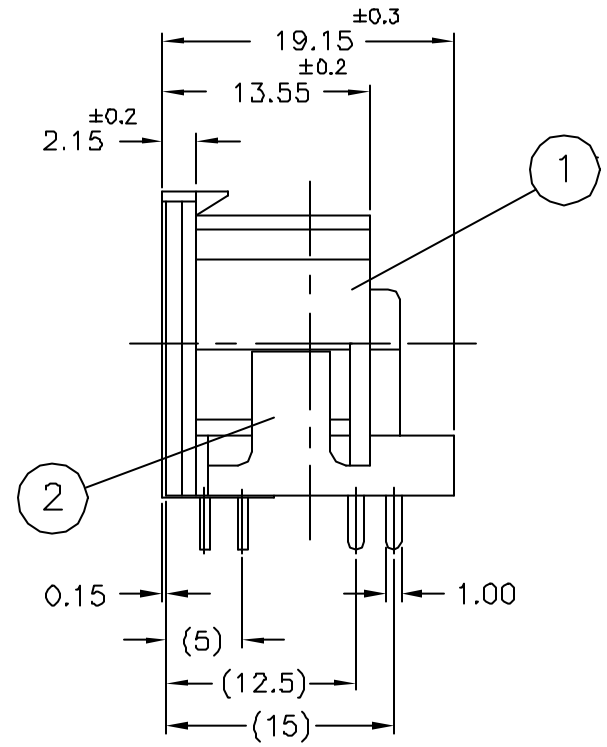

SPECIFICATIONS:

1. CURRENT CARRYING CAPACITY:
   1) AC: 100V 1A MAX.
   2) DC: 24V 2A MAX.
2. CONTACT RESISTANCE:
   1) INITIAL, BEFORE LIFE CYCLE TEST.
      PIN TO CONTACTOR: 20mΩ MAX.
      PLUG SHIELD TO CONNECTOR: 100mΩ MAX.
   2) AFTER LIFE CYCLE TEST.
      PIN TO CONTACTOR: 100mΩ MAX.
      PLUG SHIELD TO CONNECTOR: 150mΩ MAX.
3. INSULATION RESISTANCE:
   BETWEEN ANY ADJACENT OPEN CONTACTS SHALL NOT BE LESS THAN 100MΩ AS SPECIFIED BELOW WITH AT 500V DC INSULATION RESISTANCE TEST.
4. DIELECTRIC STRENGTH:
   A POTENTIAL OF 500V AC RMS. 50/60HZ SHALL BE APPLIED BETWEEN ANY OPEN CONTACTS FOR ONE MINUTE WITHOUT BREAKDOWN.
5. INSERTION FORCE: 6.0Kg MAX.
6. WITHDRAWAL FORCE: 1.0Kg MIN.
7. LIFE CYCLE TEST:
   CONNECTOR SHALL BE SUBJECT TO 5,000 CYCLES AT 10 TO 20 CYCLES PER MINUTE WITH NO ELECTRICAL LOAD.

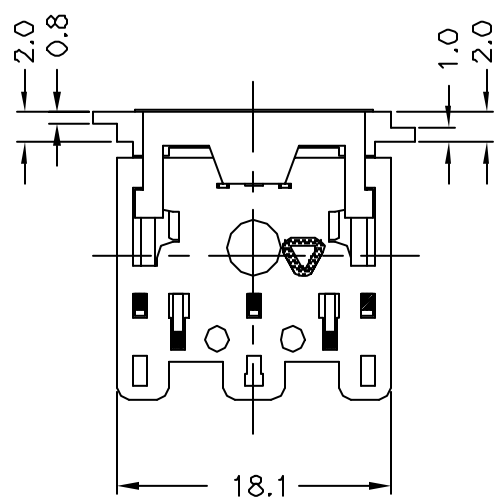

NO	DESCRIPTION	QTY	MATERIAL	PLATING & COLOR
5	CONTACT TERMINAL	5	BRASS 0.7t	TIN ALLOY PLATING
4	SHIELDING PLATE	1	PHOSPHOR BRONZE 0.15t	TIN ALLOY PLATING
3	EARTH TERMINAL	1	TI-CU COPPER ALLOY 0.2t	TIN ALLOY PLATING
2	COVER	1	PBT UL 94V-0	BLACK COLOR
1	BODY	1	PBT UL 94V-0	BLACK COLOR

UNLESS OTHERWISE SPECIFED TOLERANCES

DECIMALS:
X :±0.3
X.X :±0.2
X.XX :±0.1

ANGLES:
X :±2°
X.X :±1°

Singatron Enterprise Co., Ltd.
信音企業股份有限公司

TITLE	5P 180° DIN CONNECTOR		
DWN	EVEN 11/17-'03	PART NO. 2DJ-0065PSB2	
CHKD	SAN 11/18-'03	SCALE:2/1	UNIT: MM
APVD		SIZE: A3	SHEET:1 OF 1 REV: C

Form: 1

文件編號 RD-06-029-A