MICRO SWITCH
A DIVISION OF MINNEAPOLIS-HONEYWELL REGULATOR COMPANY
FREEPORT, ILLINOIS
FED. MFR. CODE 91929

SWITCH-ENCLOSED

CATALOG LISTING
2LN1-3-LH

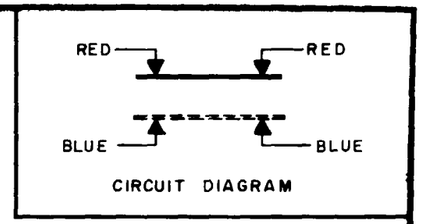

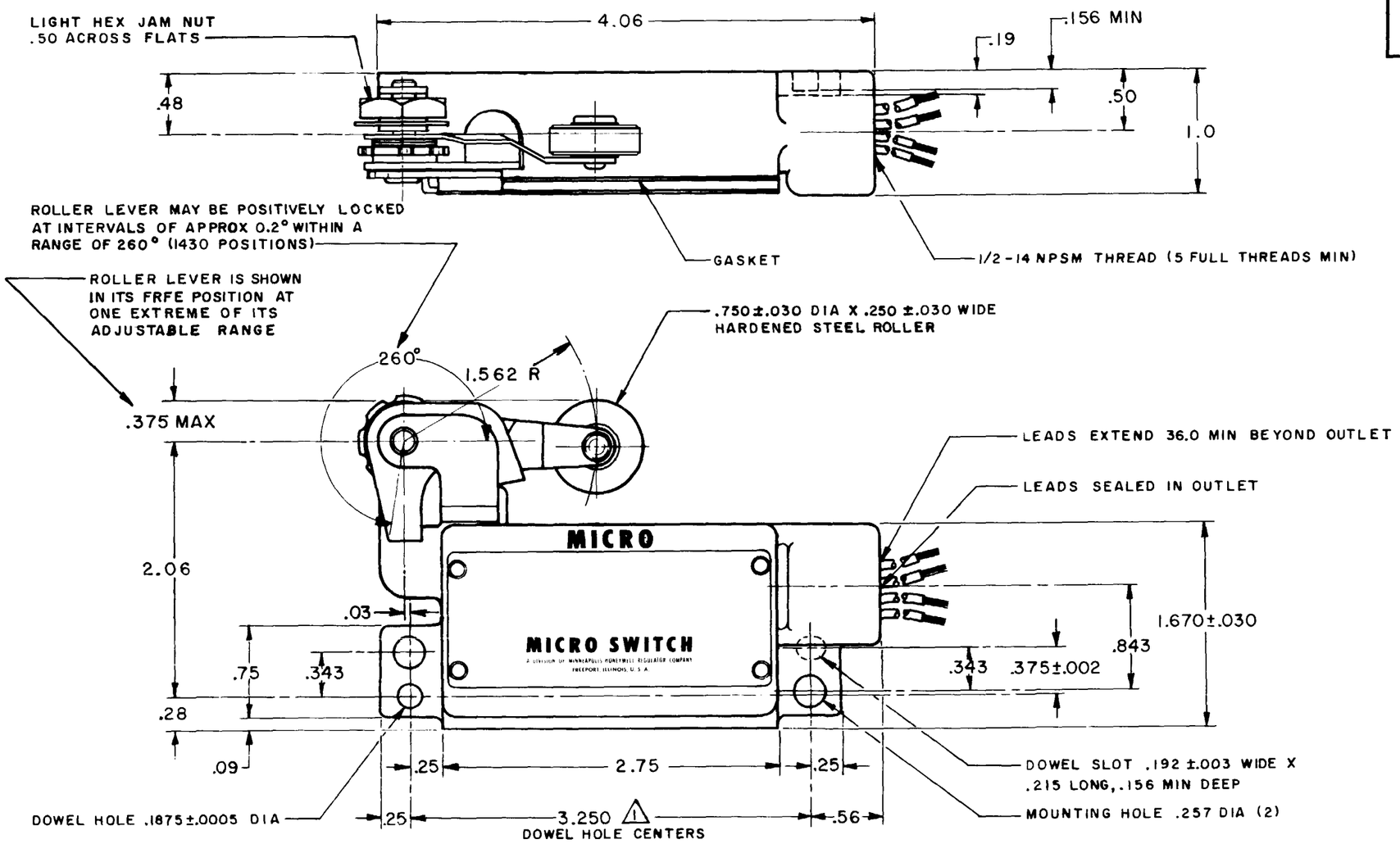

NOTES
1 - DOWEL HOLES WILL ACCEPT .187 MAX DOWEL PINS ON 3.250 X .375 ±.002 CENTERS

THIS DRAWING COVERS A PROPRIETARY ITEM AND IS THE PROPERTY OF MICRO SWITCH, A DIVISION OF MINNEAPOLIS-HONEYWELL REGULATOR CO. THIS DRAWING IS NOT TO BE COPIED OR USED WITHOUT THE APPROVAL OF MICRO SWITCH.

CHARACTERISTICS	ELECTRICAL DATA	SCALE FULL
OPERATING FORCE — — — — 3 LB MAX	CONTACT ARRANGEMENT (SEE CIRCUIT DIAGRAM)	DO NOT SCALE PRINT
DIFFERENTIAL FORCE — — — 1/4 LB MIN		UNLESS OTHERWISE SPECIFIED DIMENSIONS ARE IN INCHES
RELEASE FORCE — — — — — 1/2 LB MIN	-L25- 10 A-125 OR 250 VAC, 1/2 HP-125 VAC	TOLERANCES ARE:
PRETRAVEL — — — — — — — — .125 MAX		ONE PLACE (.0) ±.030
DIFFERENTIAL TRAVEL — — — .078 MAX		TWO PLACE (.00) ±.015
OVERTRAVEL — — — — — — .344 MIN		THREE PLACE (.000) ±.005
		ANGLES ±
		WEIGHT

(M) 2LN1-3LH ISSUE 2
REPLACES
RELEASE NO.
M 2LN1-3-LH
DRAWING NUMBER
ISSUE 8 7 6 5 4 3 2 1
CHECK

REVISIONS

A	C016227	LMH 6 SEP 61
B	C018546	MBF 14 NOV 63
C	C021551	WEG 10 JUNE 66
D	C055988	MAM 31 OCT 84
E	C081513B	JAK 13 MAR 97

FORMTEK
DRAWN LMH 6 SEP 61