**MICRO SWITCH**
a Honeywell Division
FED. MFG. CODE 91929

# SWITCH – BASIC

CATALOG LISTING
2DM6

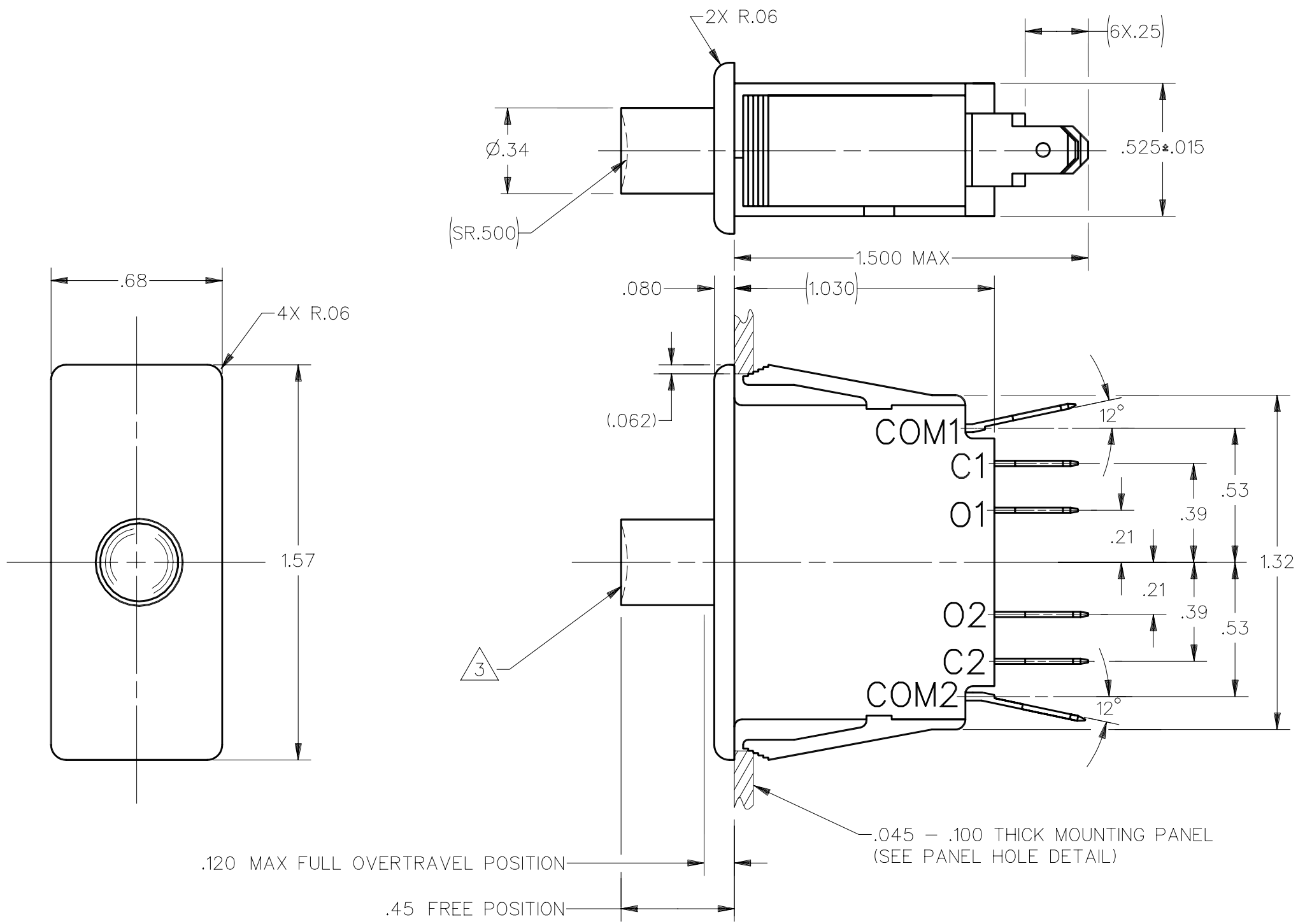


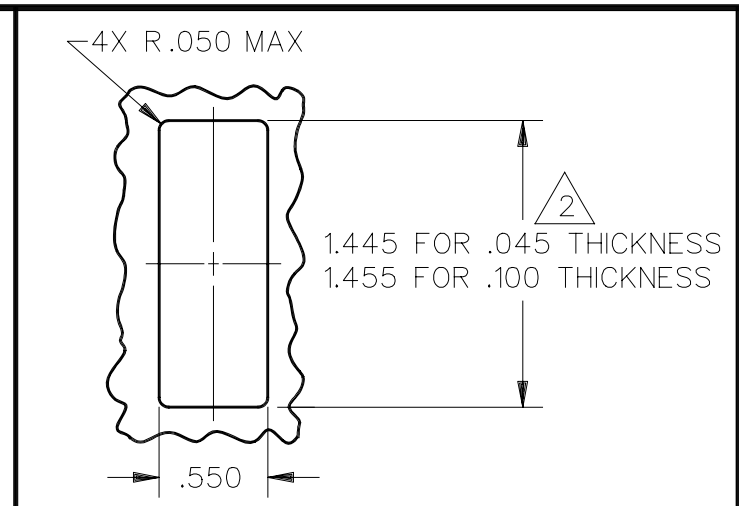


PANEL HOLE DETAIL
SCALE FULL

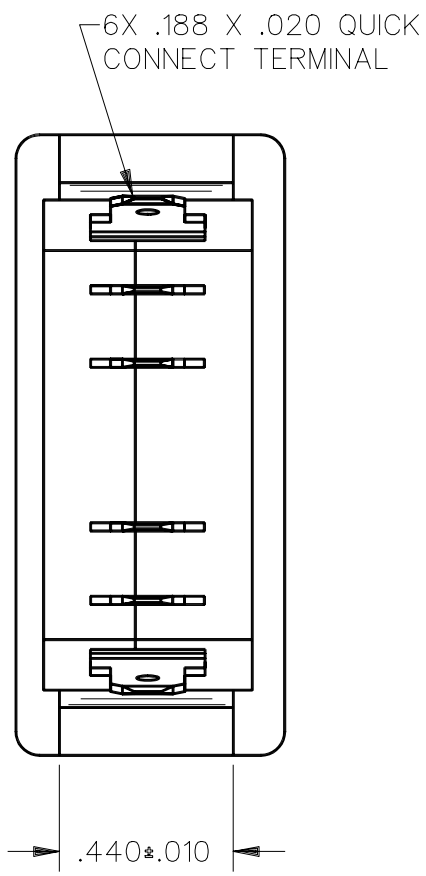


THIS DRAWING COVERS A PROPRIETARY ITEM AND IS THE PROPERTY OF MICRO SWITCH. A DIVISION OF HONEYWELL. THIS DRAWING IS NOT TO BE COPIED OR USED WITHOUT THE APPROVAL OF MICRO SWITCH

THIRD ANGLE PROJECTION

SCALE 2 TO 1

DO NOT SCALE PRINT

**CHARACTERISTICS**

OPERATING FORCE– – – – – 24 OZ MAX
(TO OPERATE BOTH CIRCUITS)

**ELECTRICAL DATA**

CONTACT ARRANGEMENT
D P D T

L181
10A 1/2HP 125, 250 OR 277 VAC

**UNLESS OTHERWISE SPECIFIED TOLERANCES ARE**

| | | |
|---|---|---|
| ONE PLACE | (.0) | ±.030 |
| TWO PLACE | (.00) | ±.015 |
| THREE PLACE | (.000) | ±.005 |
| ANGLES | | ± 5° |

WEIGHT

NOTES
1 – GRAY PLASTIC CASE AND RED PLUNGER
2 NOMINAL CUTOUT DIMENSION FOR PANELS BETWEEN .045 AND .100 SHOULD BE INTERPOLATED BETWEEN 1.445 AND 1.455
3 PUSH TO OPERATE – MOMENTARY

ANSI Y14.5M–1982 APPLIES

CATALOG LISTING 2DM6
ISSUE 7
REPLACES
RELEASE NO. SR–11092
CHECK
REVISIONS
A CO–72328 DHD 6 JAN 93
DDM/CAD
DRAWN D H D 6 JAN 93