MICRO SWITCH
a Honeywell Division
FED. MFG. CODE 91929

SWITCH - TOGGLE

CATALOG LISTING
32NT1-70 SERIES CHART 1

THIS DRAWING COVERS A PROPRIETARY ITEM AND IS THE PROPERTY OF MICRO SWITCH. A DIVISION OF HONEYWELL. THIS DRAWING IS NOT TO BE COPIED OR USED WITHOUT THE APPROVAL OF MICRO SWITCH

CATALOG LISTING	AVAILABLE LOCKING CONBINATIONS FOR CONFIGURATION SEE LETTERED DETAILS	STYLE NUMBER	ELECTRICAL RATING
32NT1-70	NONE	1	L192 10A 125, 250, 277 VAC 1/4HP 125 VAC 1/2HP 250, 277 VAC 3A 125 VAC "L"
32NT1-70 /5	E,L,N	2	

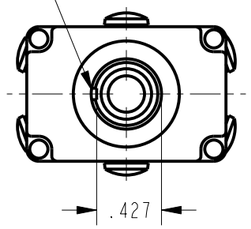

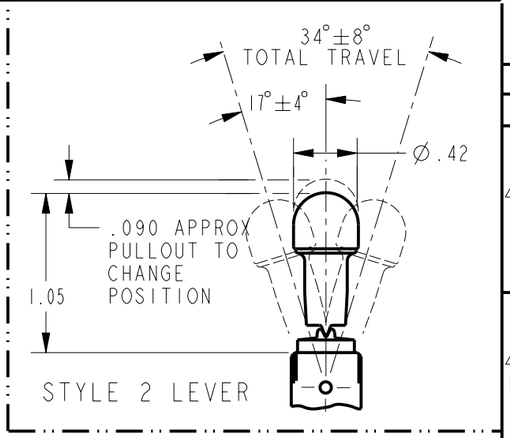

STYLE 2 LEVER

STYLE 1 LEVER

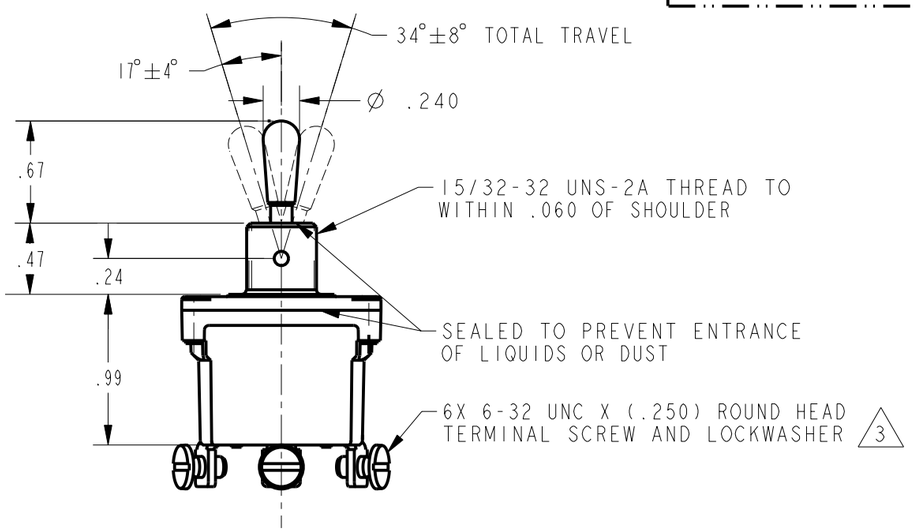

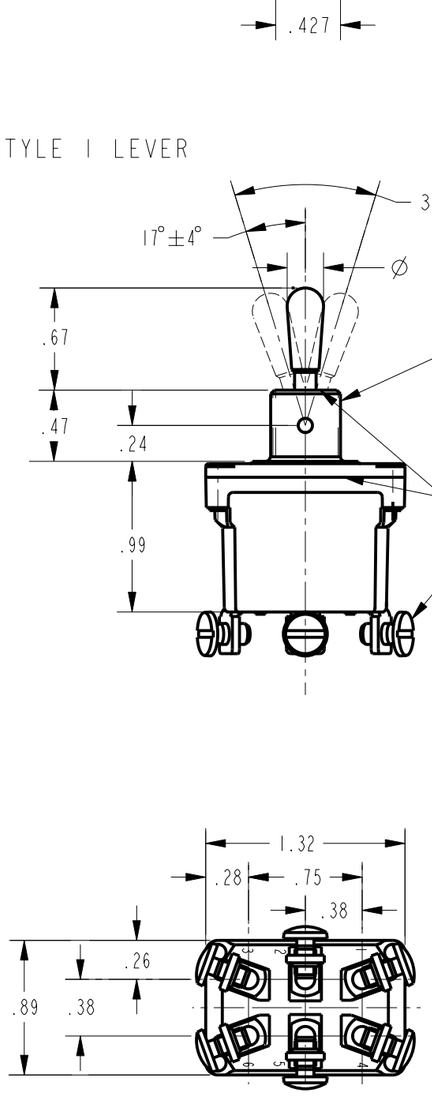

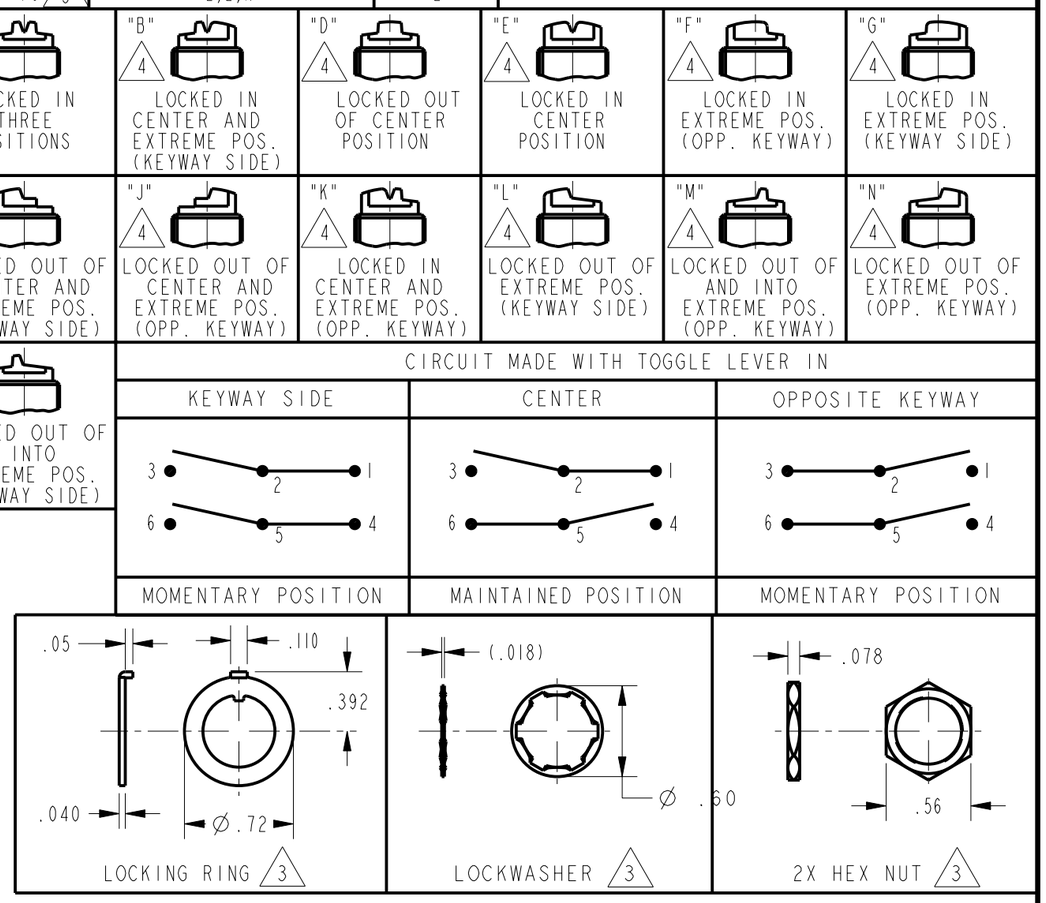

NOTES
1 - SWITCHES ARE CAPABLE OF WITHSTANDING A TEMPERATURE OF 160°F CONTINUOUSLY AT FULL RATED LOAD
2 - MICRO SWITCH CAT. LIST. MARKED ON SIDE OF SWITCH
3 FURNISHED UNASSEMBLED
4 KEYWAY SHOWN ON LEFT SIDE
5 SUFFIX LETTER MUST BE ADDED FOR DESIRED TYPE OF TOGGLE LOCKING. SEE CHART FOR AVAILABLE LOCKING COMBINATIONS

THIRD ANGLE PROJECTION
SCALE FULL
DO NOT SCALE PRINT

UNLESS OTHERWISE SPECIFIED TOLERANCES ARE		
ONE PLACE	(.0)	±.030
TWO PLACE	(.00)	±.015
THREE PLACE	(.000)	±.005
ANGLES		±

WEIGHT .12 LBS APPROX

ANSI Y14.5M-1982 APPLIES

CATALOG LISTING 32NT1-70 SERIES CHART 1
PAGE 1 OF 1
RELEASE NO. PR-22835
REPLACES
ISSUE 2
CHECK
REVISIONS
A CO-94361 DCS 22 NOV 99
CHECK
CHECK 23JUL97
JJA
CHECK
22 JUL 97
PTC/CAD 2D
DRAWN TSM