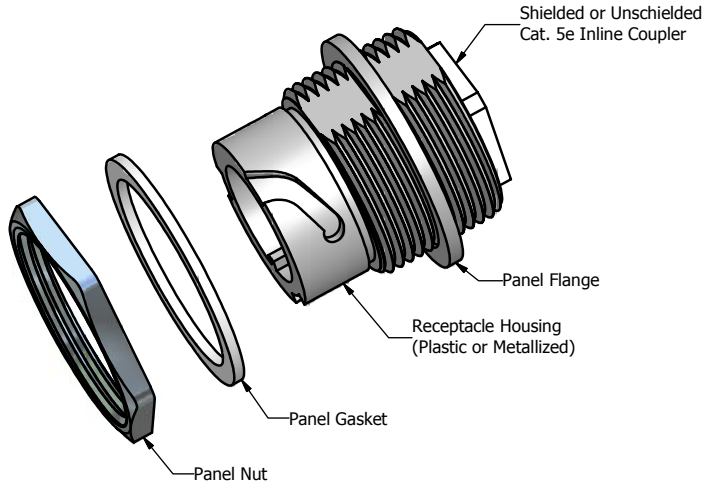

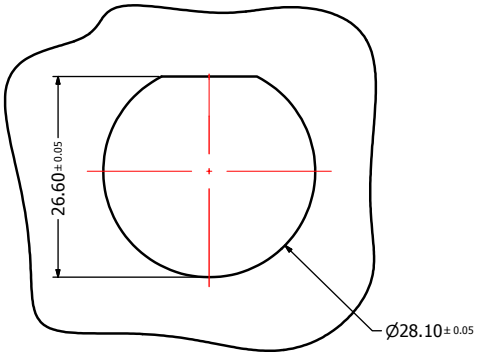

Recommended Panel Cutout

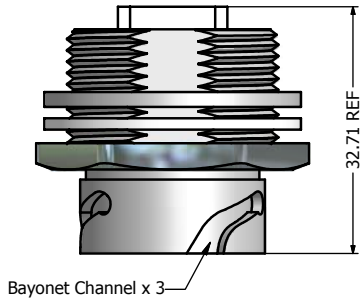

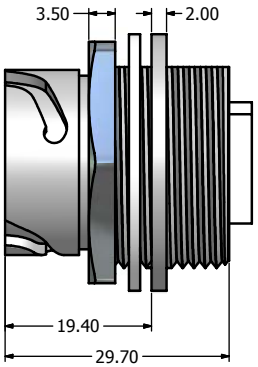

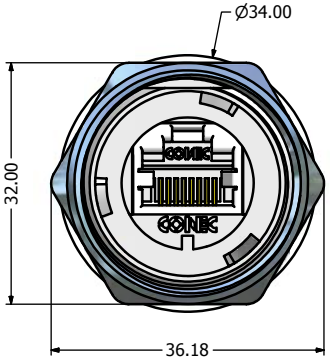

Notes:

1. Electrical Specifications:
   - Meets EIA/TIA-568-B.2 Cat.5e Specification
   - Contact Resistance: 20mOhm max.
   - Insulation Resistance: 500MOhm min. @ 100 VDC
   - Current Rating: 1.2A max. at 25˚C
   - Working Voltage: 100 VDC
   - DWV: 1000 VDC/60s Contact to Contact, 1500 VDC/60s Contact to Metal Shell
   - Operating Temperature: -40˚C to +85˚C
2. Material and Finish:
   - Receptacle Housing: Polyester (Black) or Metallized ABS (Nickel Plated); UL94 V-0
   - Panel Nut: Brass, Finish: Nickel Plated
   - Panel Gasket: Silicone, Color: White
   - RJ45 Jack Metal Shell: Copper Alloy, Nickel Plated
   - RJ45 Jack Plastic Housing: Glass filled PBT UL94 V-0, Color: Black
   - RJ45 Jack Contacts: Phosphor Bronze, Finish: 50u" Gold min. over Nickel
3. Connector can be front or rear mounted to a maximum panel thickness of 3.2mm.
4. RoHS compliant

Directive 2002/95/EC
"RoHS"
Compliant

Description	Part Number
Plastic Version with Shielded RJ45 Inline Coupler	17-10009
Plastic Version with Unshielded RJ45 Inline Coupler	17-10019
Metallized Plastic Version with Shielded RJ45 Inline Coupler	17-10012

THIS DRAWING MAY NOT BE COPIED OR REPRODUCED IN ANY WAY, AND MAY NOT BE PASSED ON TO A THIRD PARTY WITHOUT WRITTEN PERMISSION. OWNERSHIP AND COPYRIGHT OF CONEC CORPORATION

DO NOT ALTER CAD DRAWING BY HAND

Customer:

Name	Title	Approval Date

Rev.	Changes	Date	Name
d		Jan/28/08	Vincent Ke
c		Jun/18/07	Vincent Ke
b		May/15/07	Vincent ke
a	origin		

Tolerance
Unless otherwise specified
0 PLC ± 0.50
1 PLC ± 0.38
2 PLC ± 0.25
3 PLC ± 0.10
ANGLES ± 3˚

2007	Date	Name
Draw.	Apr. 04	Vincent Ke
Appd.	Apr. 04	J. Chaudry
Norm		
D-old		

Autodesk Inventor

CONEC®

Scale: 1.5:1 | Dim. in mm

Material: See Notes

Title: Receptacle Assembly Kit
Industrial Ethernet Connector (IP67)
with Cat. 5e RJ45 Inline Coupler

Drawing No.: 39K1A206 | DIN A3

Part No.: SEE P/N ABOVE | Sheet 1/1